HEIDENHAIN

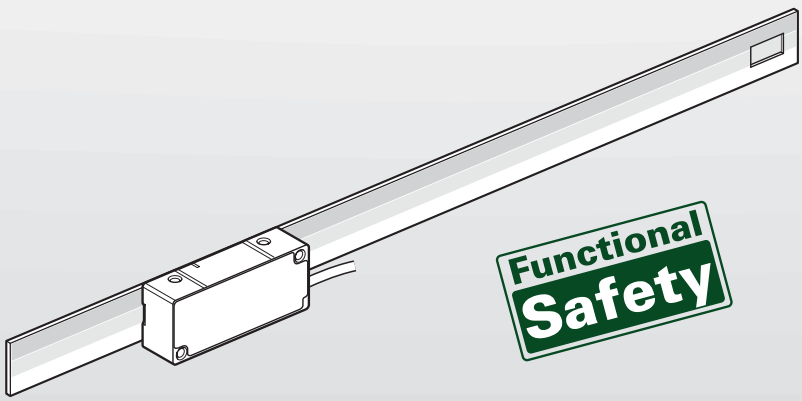

LIC 4119 FS

Mounting Instructions

English (en)
01/2025

Table of contents

1 Basic information ... 4

1.1 Validity of the documentation ... 4

1.2 Target groups of the Mounting Instructions ... 4

1.3 Notes on reading the documentation ... 5

1.4 Symbols and fonts used for marking text ... 6

1.5 Notes in this documentation ... 7

1.6 Units and tolerances ... 7

2 Safety ... 8

2.1 Personnel qualification ... 8

2.2 General safety precautions ... 8

3 Items supplied and accessories ... 10

3.1 Items supplied ... 10

3.1.1 Included with the LIC 4009 FS parts kit ... 10

3.1.2 Included with the LIC 411 FS scanning head ... 11

3.2 Mounting accessories ... 12

3.2.1 Accessories for mounting the parts kit ... 12

3.2.2 Accessories for mounting the scanning head ... 12

4 Mounting ... 13

4.1 Requirements and notes ... 13

4.1.1 Functional safety ... 13

4.2 Mounting the parts kit ... 14

4.2.1 Notes on mounting the parts kit ... 14

4.2.2 Materials and tools ... 14

4.2.3 Bonding the scale tape ... 15

4.3 Mounting the scanning head ... 17

4.3.1 Choosing the mounting variant ... 17

4.3.2 Variant: Mounting with the holder on the side ... 18

4.3.3 Variant: Mounting with the holder at top ... 21

4.3.4 Variant: Mounting with the holder at bottom ... 24

5 Adjustment and diagnosis 27

5.1 Requirements and notes 27

5.2 Continuity check 27

5.2.1 Measuring the electrical resistance 27

5.3 Connecting the encoder to the ATS 28

5.3.1 Connecting the encoder 28
5.3.2 Selecting the connection 28
5.3.3 Connecting the encoder using its ID 29
5.3.4 Connecting the encoder manually 30

5.4 Mounting the scanning head 33

5.4.1 Using the mounting wizard 33

6 Final steps 35

6.1 Connecting the encoder with the downstream electronics 35

7 Removal 36

7.1 Safety precautions regarding removal 36

7.2 Removing the scanning head 36

7.3 Disassembling the parts kit 36

1 Basic information

This chapter contains information about the product and the Mounting Instructions.

1.1 Validity of the documentation

These Mounting Instructions apply to LIC 4119 FS.

▶ Before using the documentation, check whether the documentation and product model match

The designation of the product is printed on the ID label.

ID label

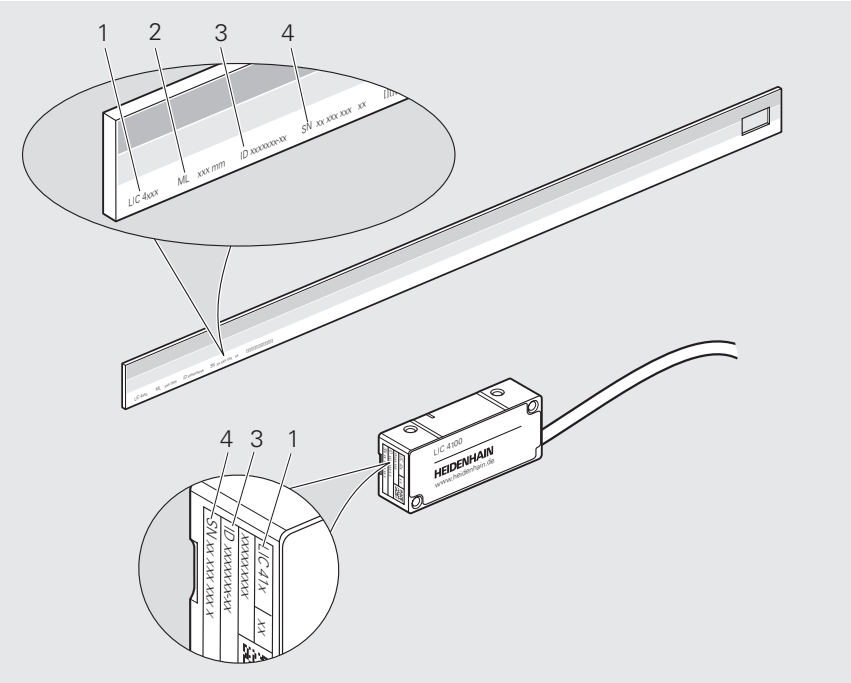

ID label with legend

1 Product name
2 Measuring length (ML)
3 Product ID / Part number (ID)
4 Serial number (SN)

1.2 Target groups of the Mounting Instructions

The Mounting Instructions must be read and observed by every person who performs any of the following tasks:

- Design
- Mounting
- Removal

1.3 Notes on reading the documentation

⚠ WARNING

Fatal accidents, personal injury or property damage caused by non-compliance with the documentation!

Failure to comply with the documentation may result in fatal accidents, personal injury or property damage.

- Read the documentation carefully from beginning to end
- Keep the documentation for future reference

The following table lists the various parts of the documentation in their order of reading priority.

Document type	Description
Addendum	An Addendum supplements or supersedes the corresponding contents of the Operating Instructions and, if applicable, of the Mounting Instructions. If an Addendum is included in the shipment, it has the highest priority for reading. All other documentation content retains its validity.
Operating Instructions	The Operating Instructions contain all of the information and safety instructions for the proper and intended operation of the device. The Operating Instructions (English language version) are included in delivery and can also be downloaded in other languages from **www.heidenhain.com/documentation**. The Operating Instructions must be read prior to initial operation of the product. The Operating Instructions have the second highest priority for reading.
Mounting Instructions	The Mounting Instructions contain all the information and safety precautions needed for the proper mounting and installation of a product. The Mounting Instructions are not included in delivery and must be downloaded from **www.heidenhain.com/documentation**. The Mounting Instructions have the third highest priority for reading.

Have you found any errors or would you like to suggest changes?

We are continuously striving to improve our documentation for you. Please help us by sending your suggestions to the following e-mail address:

userdoc@heidenhain.de

1.4 Symbols and fonts used for marking text

In these instructions the following symbols and fonts are used for marking text:

Format	Meaning
▶ ... > ...	Identifies an action and the result of this action Example: ▶ Tilt the shipping brace to remove it **(c)** > The shipping brace has been removed now
■ ... ■ ...	Identifies an item of a list Example: ■ Solid contaminants: class 3 ■ Max. pressure dew point: class 4
Bold	Identifies elements in figures and illustrations, such as positions, dimensions and worksteps Example: **S** marks the beginning of the measuring length **(ML)**.

1.5 Notes in this documentation

Safety precautions

Precautionary statements warn of hazards in handling the product and provide information on their prevention. Precautionary statements are classified by hazard severity and divided into the following groups:

⚠ DANGER

Danger indicates hazards for persons. If you do not follow the avoidance instructions, the hazard **will result in death or severe injury.**

⚠ WARNING

Warning indicates hazards for persons. If you do not follow the avoidance instructions, the hazard **could result in death or serious injury**.

⚠ CAUTION

Caution indicates hazards for persons. If you do not follow the avoidance instructions, the hazard **could result in minor or moderate injury.**

NOTICE

Notice indicates danger to material or data. If you do not follow the avoidance instructions, the hazard **could result in property damage**.

Informational notes

Informational notes ensure reliable and efficient operation of the product. Informational notes are divided into the following groups:

The information symbol indicates a **tip**.
A tip provides important additional or supplementary information.

The book symbol indicates a **cross reference**.
A cross reference leads to external documentation, for example: further documentation from HEIDENHAIN or another supplier.

1.6 Units and tolerances

Unless otherwise specified, the dimensions stated in these Mounting Instructions are given in millimeters.

Unless otherwise specified, the tolerances stated in these Mounting Instructions conform to ISO 8015 and ISO 2768 standards.

mm
Tolerancing ISO 8015
ISO 2768:1989-mH
≤ 6 mm: ±0.2 mm

2 Safety

This chapter provides important safety information needed for the proper mounting and installation of the product.

2.1 Personnel qualification

Mounting, initial configuration and removal must be conducted by a qualified specialist under compliance with local safety regulations.

2.2 General safety precautions

⚠ WARNING

Danger of electric shock due to connection to unsuitable downstream electronics!

If you connect unsuitable downstream electronics to the product, fatal accidents or severe personal injuries can occur.

- Connect the product only to downstream electronics whose supply voltage comes from PELV systems

⚠ WARNING

Live plug connections!

If you disengage plug connections while the equipment is under power, this may result in fatal accidents or severe personal injury.

- Do not engage or disengage any connecting elements while the product is under power

⚠ WARNING

Risk of injury from damaged or worn components!

Safety functions can fail if damaged or worn components are installed. Failed safety functions can result in death or serious injury.

- Inspect the component for damage.
- Do not use any damaged or worn components
- In case of replacement, repair the thread
- Use new screws, spring pins and nuts
- Secure screws and nuts with suitable material-bonding anti-rotation lock

NOTICE

Property damage due to mechanical stress!

- Do not drop the product or subject it to major vibration
- Do not expose the product to mechanical stress
- Do not change the physical structure of the product

NOTICE

Property damage due to electrical stress!

- Do not engage or disengage any connecting elements while the product is under power
- Do not touch the contacts of the plug connections

NOTICE

Electrostatic discharge (ESD)!

This product contains electrostatically sensitive components that can be destroyed by electrostatic discharge (ESD).

- It is essential to observe the safety precautions for handling ESD-sensitive components
- Never touch connector pins without ensuring proper grounding
- Wear a grounded ESD wristband when handling the connections of the product

3 Items supplied and accessories

This chapter contains information on the items supplied and the available accessories of the product.

3.1 Items supplied

3.1.1 Included with the LIC 4009 FS parts kit

Component	Figure
Scale tape	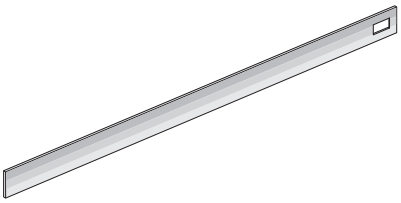
Mounting aid	
Screw	
Operating Instructions	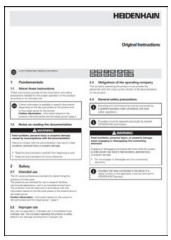
Quality Inspection Document	

3.1.2 Included with the LIC 411 FS scanning head

Component	Figure
Scanning head	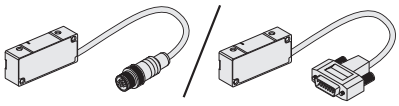
Fastener kit (M2×16)	
Fastener kit (M2×25)	
Spacer shim (0.15 mm) (not needed)	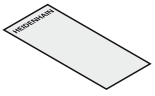
Spacer shim (0.75 mm)	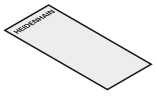
Operating Instructions	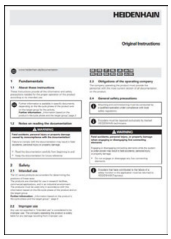
Manufacturer's Inspection Document	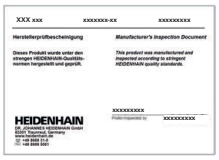

3.2 Mounting accessories

The following accessories can be ordered separately from HEIDENHAIN.

3.2.1 Accessories for mounting the parts kit

Designation	ID	Figure
Roller	276885-01	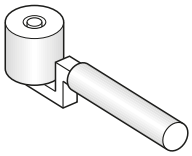

3.2.2 Accessories for mounting the scanning head

Designation	ID	Figure
PWM 21 inspection device	1200635-51	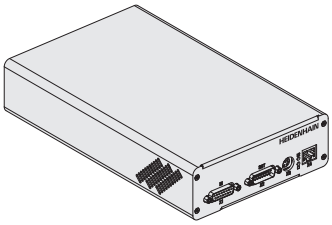
Adjusting and Testing Software (ATS) The ATS software is available for download free of charge from **www.heidenhain.com/service/downloads/software/**.		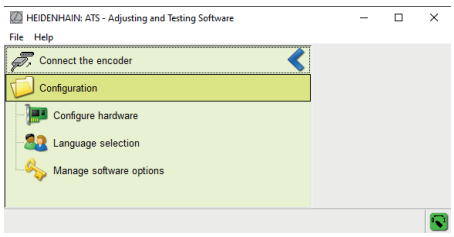

4 Mounting

This chapter describes the mounting requirements, different mounting variants, and all other tasks necessary when mounting.

4.1 Requirements and notes

NOTICE

Property damage due to inappropriate tools!

Using inappropriate tools for mounting or removal of the encoder may cause damage to the encoder.

- Do not use hammers
- Do not use pointed or sharp-edged tools

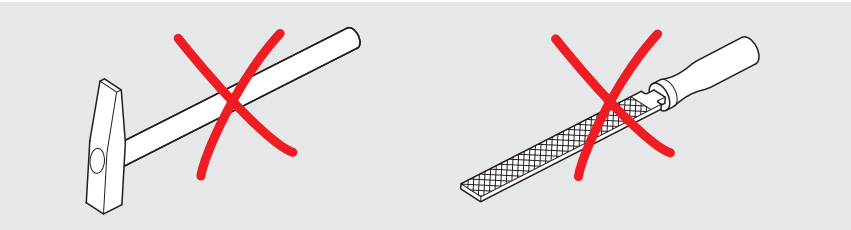

Choose a mounting attitude such that the traverse range is within the measuring length **(ML)** of the encoder.

Protect the graduation from direct contamination.

(S) = Beginning of measuring length **(ML)**

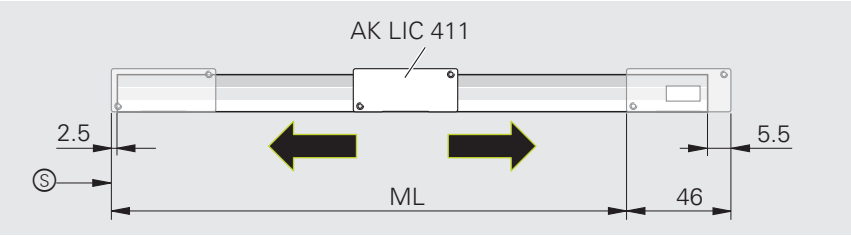

In order to ensure correct operation of the encoder, the scale or scale tape must be positioned correctly relative to the scanning head.

Code track at top if cable outlet is to the right.

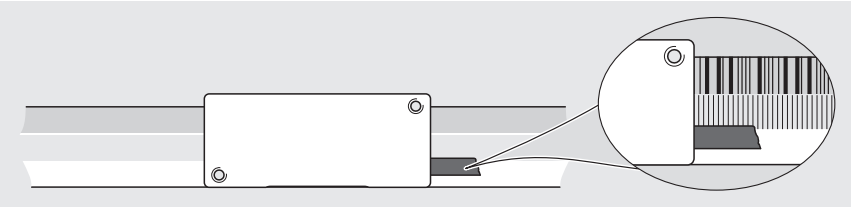

In order to avoid signal interferences, observe the minimum clearance from sources of interference (e.g., power lines).

For more information on sources of interference, refer to the **Interfaces of HEIDENHAIN Encoders** brochure.

- **www.heidenhain.com/documentation**
- Enter the document ID **1078628**

4.1.1 Functional safety

If the machine manufacturer requires fault exclusion for the loosening of the mechanical connection in order to use the encoder, the information on safe mechanical connection must be complied with. The corresponding information is marked with "**For mechanical fault exclusion.**"

For more information, see the **Exposed Linear Encoders** brochure.

- **www.heidenhain.com/documentation**
- Enter the document ID **208960**

4.2 Mounting the parts kit

4.2.1 Notes on mounting the parts kit

Please note that the mounting surfaces and threads must be clean and free of burrs and paint.

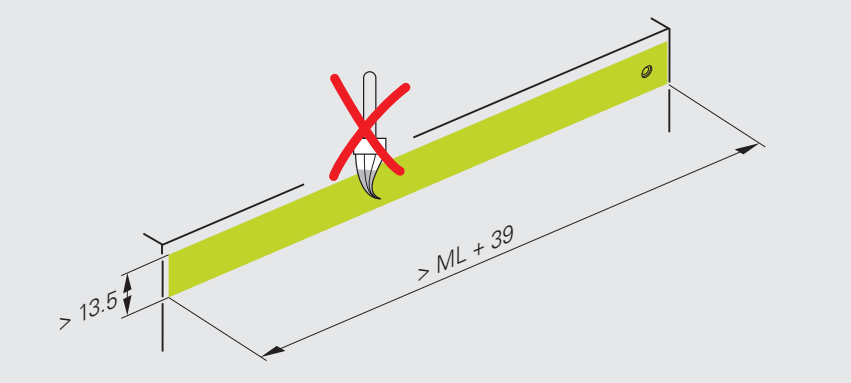

The mounting tolerances refer to the machine guideway **(F)**.

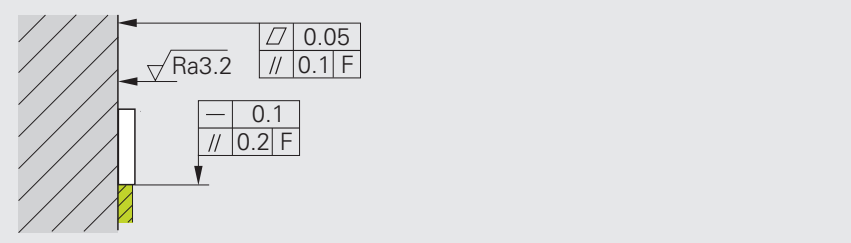

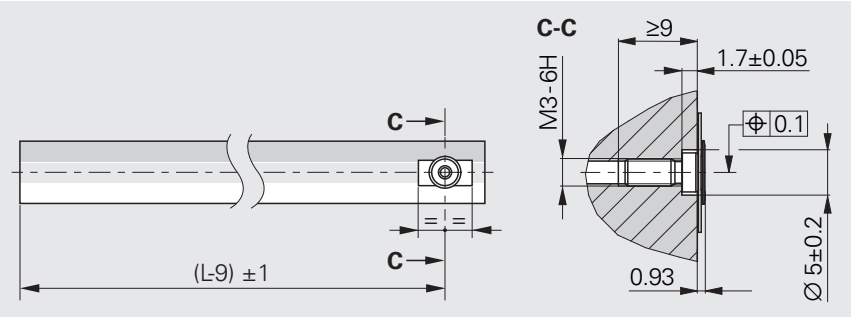

4.2.2 Materials and tools

For this task, the following materials and tools are needed:

Included in delivery

- Mounting aid
- 1 screw (ISO 10664–10)

To be provided separately

- Aligning rail
- Roller
- Material bonding anti-rotation lock
- Torque wrench (T10 hexalobular socket)

4.2.3 Bonding the scale tape

Attach the scale tape with adhesive mounting film only at a temperature of 15 °C – 35 °C.

Pay attention to the expiration date on the package.

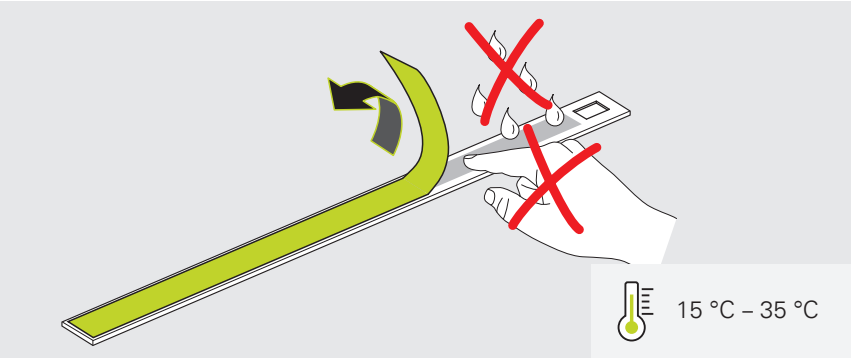

- Attach the aligning rail
- Remove about one-third of the protective foil from the adhesive film
- Use the mounting aid to align the scale tape
- Gently glue the scale tape along the aligning rail. Remove the protective film while doing so

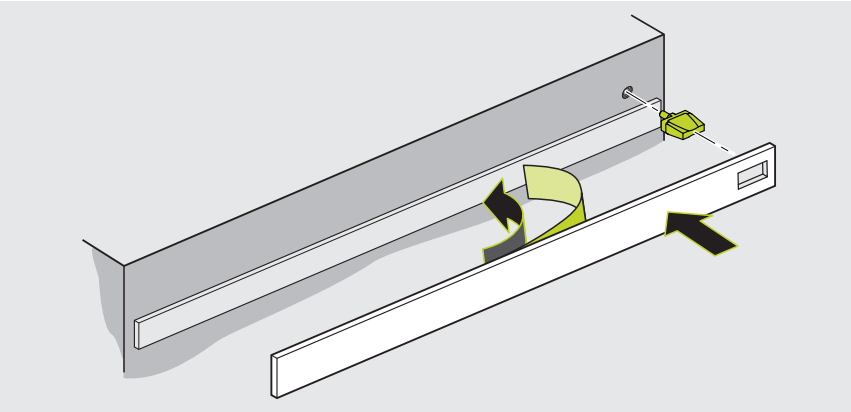

- Starting from the center, evenly press the scale tape onto the mounting surface using the roller
- Remove the aligning rail

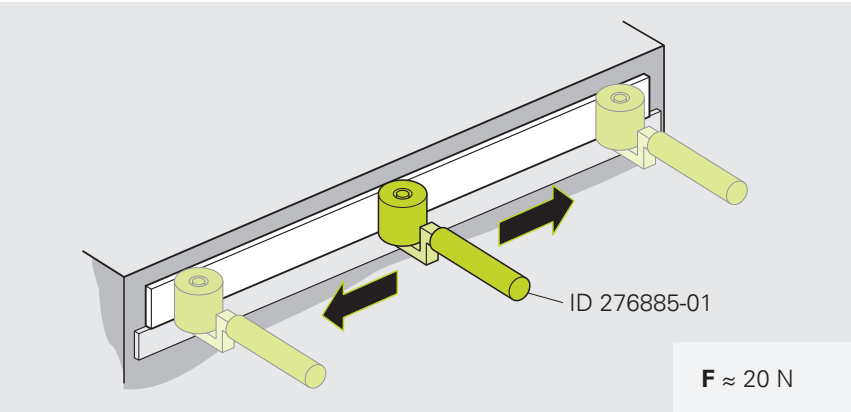

- **With mechanical fault exclusion:** Secure the screw connection with suitable material bonding anti-rotation lock

- Tighten the screw with the specified torque

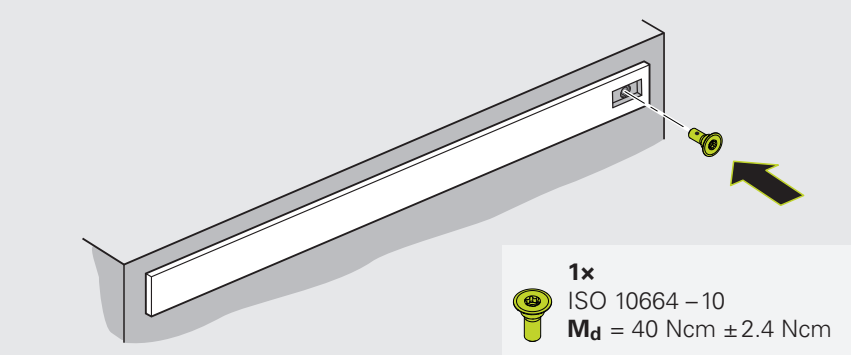

- Do not perform further work on the scale tape until the maximum adhesive force has been reached

> The maximum adhesive force of the mounting film is reached at room temperature after approx. 70 hours.

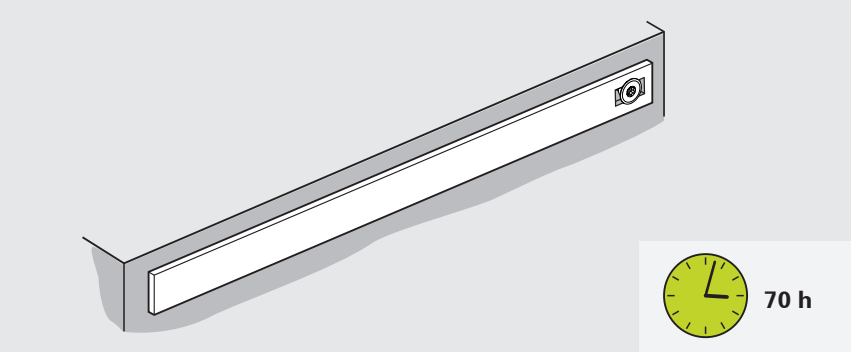

4.3 Mounting the scanning head

4.3.1 Choosing the mounting variant

Mounting variants for the scanning head	
Holder **on the side**	Holder **at the top**
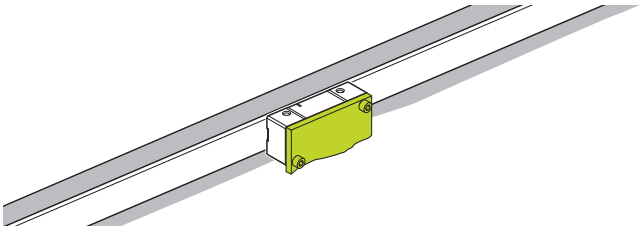	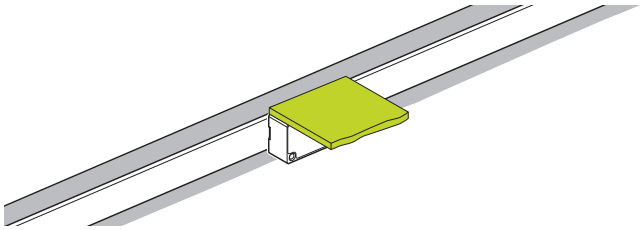
Page 18	**Page 21**
Holder at the **bottom**	
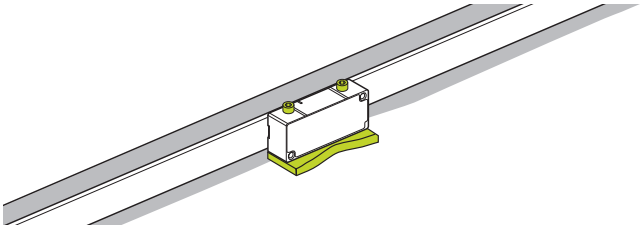	
Page 24	

4.3.2 Variant: Mounting with the holder on the side

The mounting variant described in this chapter refers to mounting of the scanning head with the holder on the side.

An overview of the mounting variants is provided on Page 17.

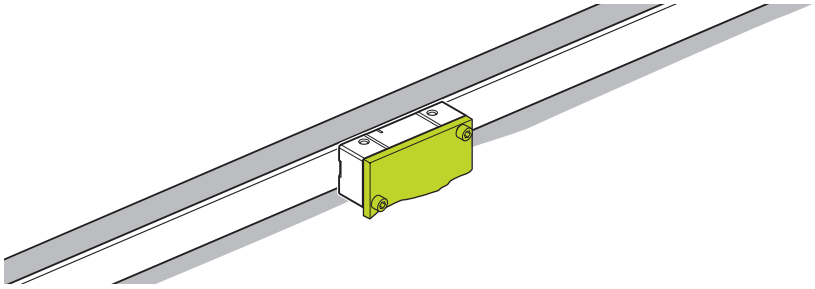

Notes on mounting the scanning head with the holder on the side

NOTICE

Machine acceptance test!

- After installation or replacement of the encoder, perform an acceptance test of the machine in accordance with the manufacturer's specification

Please note that the mounting surfaces and threads must be clean and free of burrs and paint.

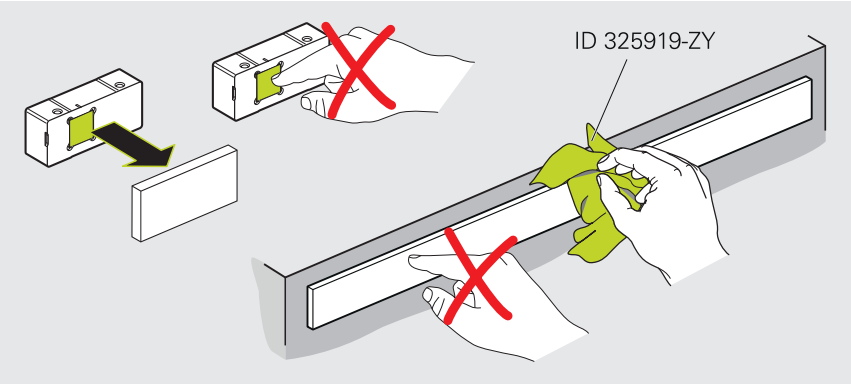

If necessary, clean the graduation and the scanning head with a lint-free cloth and isopropyl alcohol.

NOTICE

Property damage due to unsuitable cleaning agents!

- Use only isopropyl alcohol to clean the encoder
- Clean the encoder with a lint-free cloth

Pay attention to the mounting dimensions. Deviations from the mounting dimensions lead to imprecise measurement results during operation.

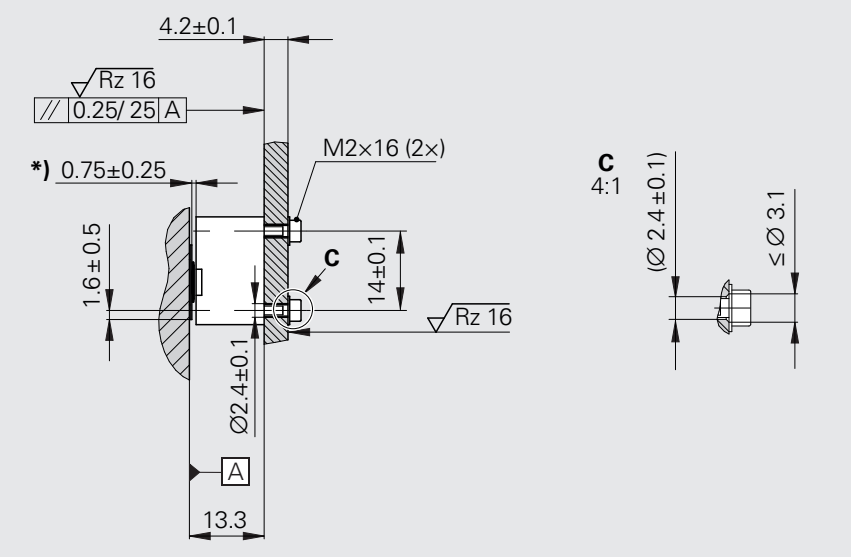

***)** Mounting clearance between the scanning head and graduation.

Materials and tools

For this task, the following materials and tools are needed:

Included in delivery	To be provided separately
■ Spacer shim ■ 2 screws (M2×16) ■ 2 washers	■ Torque wrench (hexagon socket for 1.5 mm)

Mounting the scanning head

NOTICE

Requirements for screw connections

- Screw connections must comply with friction class B according to VDI 2230
- Materially bonding threadlocker not permitted for screw connections (friction class B)
- Use the included screws in lubricated condition. Do not clean them
- Fault exclusion is ensured up to a maximum of five fastening repetitions
- If a replacement becomes necessary, use new screws

- If necessary, remove the protective cap from the scanning head
- If necessary, remove the protective film from the scale tape

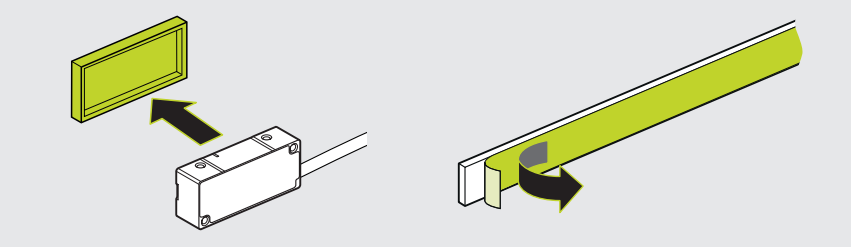

- Prepare the spacer shim

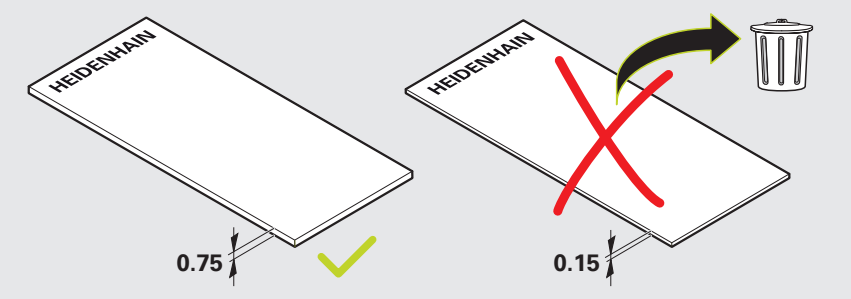

- Use the spacer shim to set the mounting clearance
- Lightly screw on the scanning head
- Remove the spacer shim
- Ensure that the scanning head does not collide with the screw from the parts kit

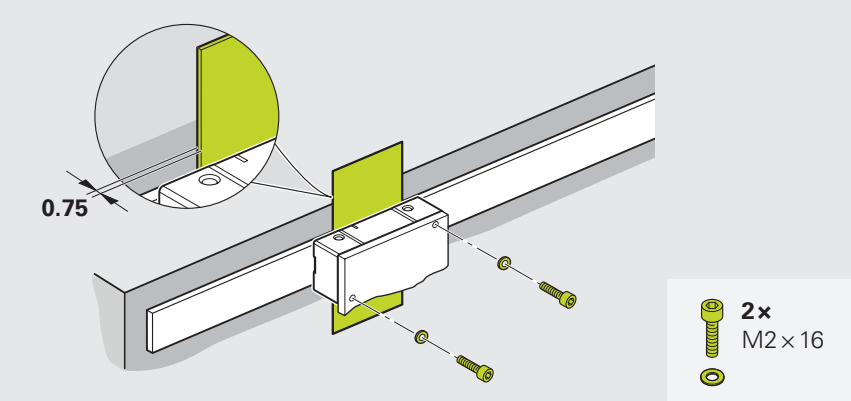

Next step: "Adjustment and diagnosis", Page 27

4.3.3 Variant: Mounting with the holder at top

The mounting variant described in this chapter refers to mounting of the scanning head with the holder at top.

An overview of the mounting variants is provided on Page 17.

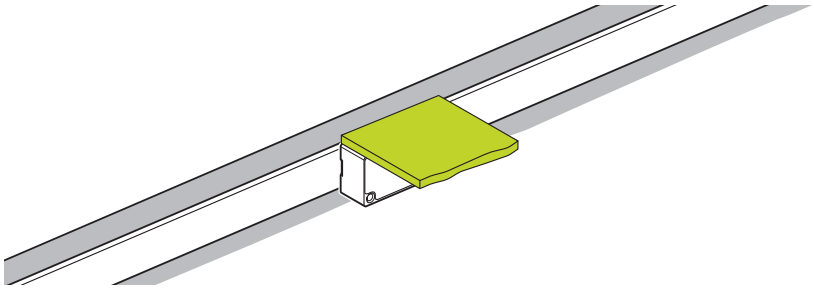

Notes on mounting the scanning head with the holder at top

NOTICE

Machine acceptance test!

- After installation or replacement of the encoder, perform an acceptance test of the machine in accordance with the manufacturer's specification

Please note that the mounting surfaces and threads must be clean and free of burrs and paint.

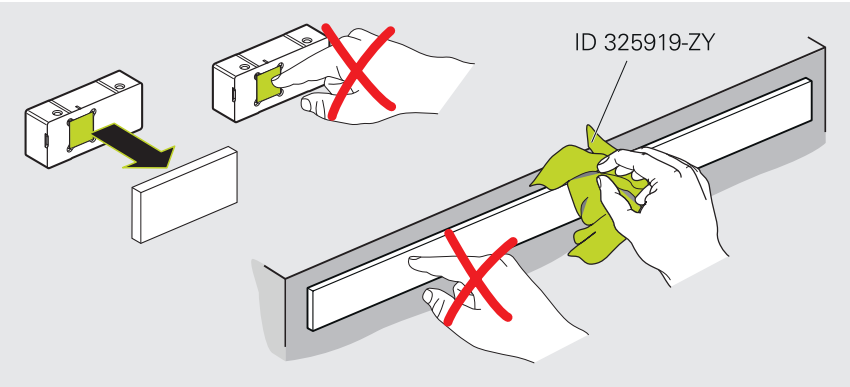

> If necessary, clean the graduation and the scanning head with a lint-free cloth and isopropyl alcohol.

NOTICE

Property damage due to unsuitable cleaning agents!

- Use only isopropyl alcohol to clean the encoder
- Clean the encoder with a lint-free cloth

Pay attention to the mounting dimensions. Deviations from the mounting dimensions lead to imprecise measurement results during operation.

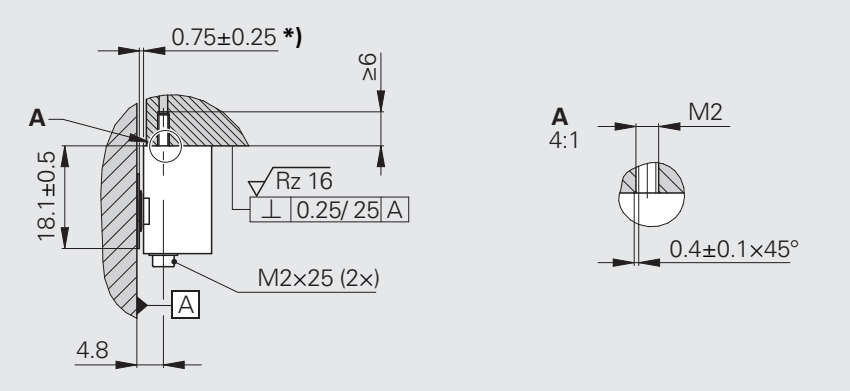

***)** Mounting clearance between the scanning head and graduation.

Materials and tools

For this task, the following materials and tools are needed:

Included in delivery	To be provided separately
■ Spacer shim ■ 2 screws (M2×25) ■ 2 washers	■ Torque wrench (hexagon socket for 1.5 mm)

Mounting the scanning head

- If necessary, remove the protective cap from the scanning head
- If necessary, remove the protective film from the scale tape

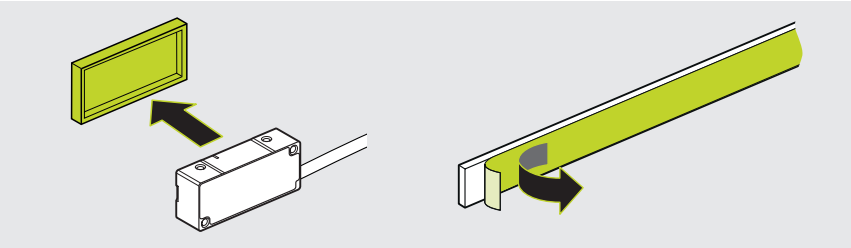

- Prepare the spacer shim

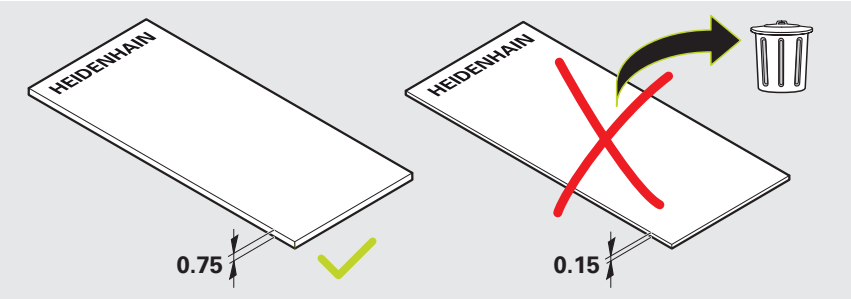

NOTICE

Requirements for screw connections

- Screw connections must comply with friction class B according to VDI 2230
- Materially bonding threadlocker not permitted for screw connections (friction class B)
- Use the included screws in lubricated condition. Do not clean them
- Fault exclusion is ensured up to a maximum of five fastening repetitions
- If a replacement becomes necessary, use new screws

- Use the spacer shim to set the mounting clearance
- Lightly screw on the scanning head
- Remove the spacer shim
- Ensure that the scanning head does not collide with the screw from the parts kit

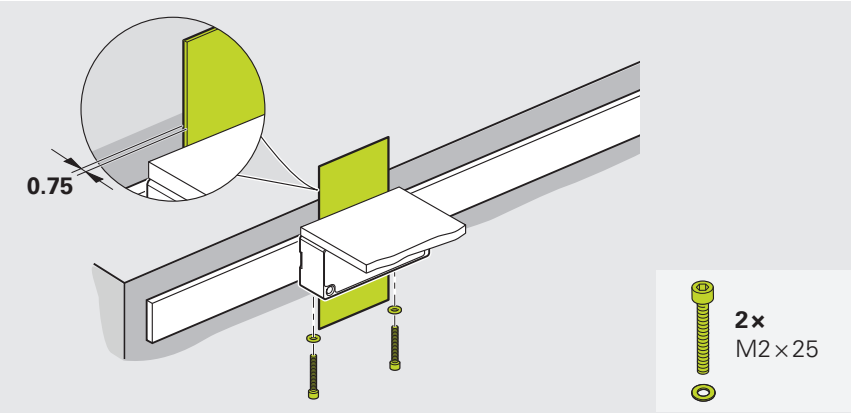

Next step: "Adjustment and diagnosis", Page 27

4.3.4 Variant: Mounting with the holder at bottom

The mounting variant described in this chapter refers to mounting of the scanning head with the holder at bottom.

An overview of the mounting variants is provided on Page 17.

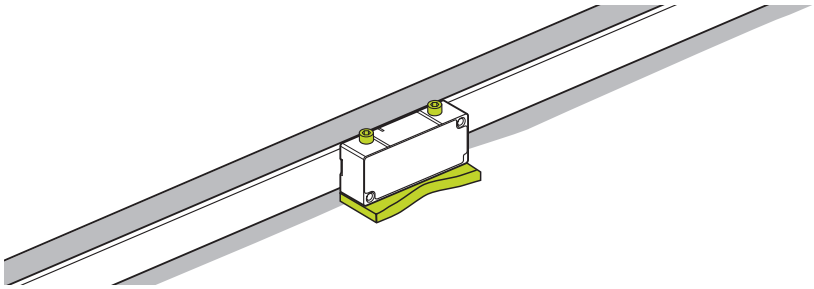

Notes on mounting the scanning head with the holder at bottom

NOTICE

Machine acceptance test!

- After installation or replacement of the encoder, perform an acceptance test of the machine in accordance with the manufacturer's specification

Please note that the mounting surfaces and threads must be clean and free of burrs and paint.

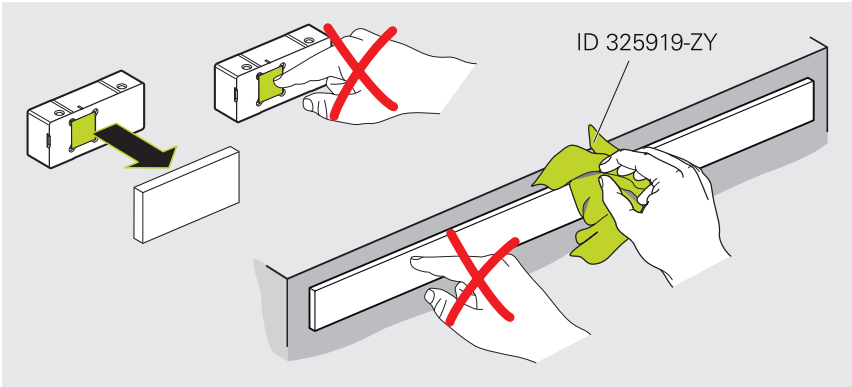

If necessary, clean the graduation and the scanning head with a lint-free cloth and isopropyl alcohol.

NOTICE

Property damage due to unsuitable cleaning agents!

- Use only isopropyl alcohol to clean the encoder
- Clean the encoder with a lint-free cloth

Pay attention to the mounting dimensions. Deviations from the mounting dimensions lead to imprecise measurement results during operation.

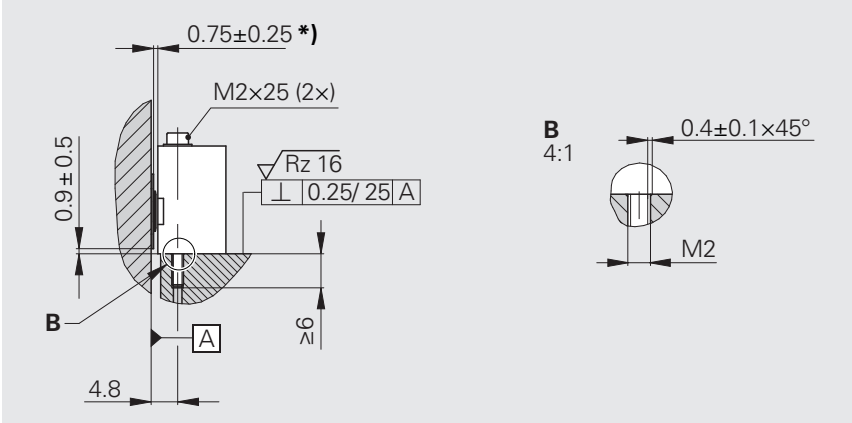

*) Mounting clearance between the scanning head and graduation.

Materials and tools

For this task, the following materials and tools are needed:

Included in delivery	To be provided separately
■ Spacer shim ■ 2 screws (M2×25) ■ 2 washers	■ Torque wrench (hexagon socket for 1.5 mm)

Mounting the scanning head

NOTICE

Requirements for screw connections

- Screw connections must comply with friction class B according to VDI 2230
- Materially bonding threadlocker not permitted for screw connections (friction class B)
- Use the included screws in lubricated condition. Do not clean them
- Fault exclusion is ensured up to a maximum of five fastening repetitions
- If a replacement becomes necessary, use new screws

- If necessary, remove the protective cap from the scanning head
- If necessary, remove the protective film from the scale tape

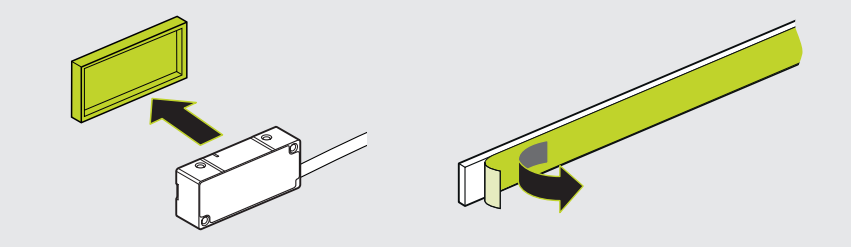

- Prepare the spacer shim

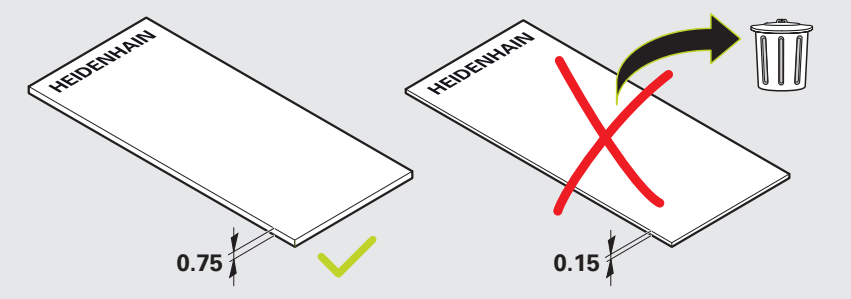

- Use the spacer shim to set the mounting clearance
- Lightly screw on the scanning head
- Remove the spacer shim
- Ensure that the scanning head does not collide with the screw from the parts kit

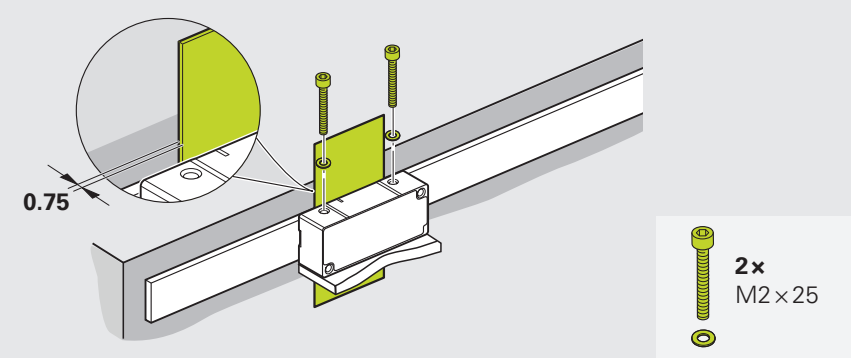

Next step: "Adjustment and diagnosis", Page 27

5 Adjustment and diagnosis

This chapter describes the continuity test, as well as the adjustment and diagnosis with the PWM 21 and the Adjusting and Testing Software (ATS).

5.1 Requirements and notes

The PWM 21 testing device together with the Adjusting and Testing Software (ATS) serves for the diagnosis and adjustment of HEIDENHAIN encoders.

The following components are needed:

- PWM 21
- ATS: version 3.2.xx and later provide integrated local encoder database for automatic encoder detection

The ATS software is available for download free of charge from **www.heidenhain.com/service/downloads/software/**.

For more information, see the **Exposed Linear Encoders** brochure.
- ▶ **www.heidenhain.com/documentation**
- ▶ Enter the document ID **208960**

For more information, see the associated Adjusting and Testing Software documentation.
- ▶ **www.heidenhain.com/documentation**
- ▶ Enter the document ID **543734**

5.2 Continuity check

Materials and tools

For this mounting step, the following materials and tools are needed:

Included in delivery	To be provided separately
	■ Resistance measuring device

5.2.1 Measuring the electrical resistance

▶ Check the electrical resistance between the connector housing and the machine

The electrical resistance between the connector housing and the machine must be < 1 Ω.

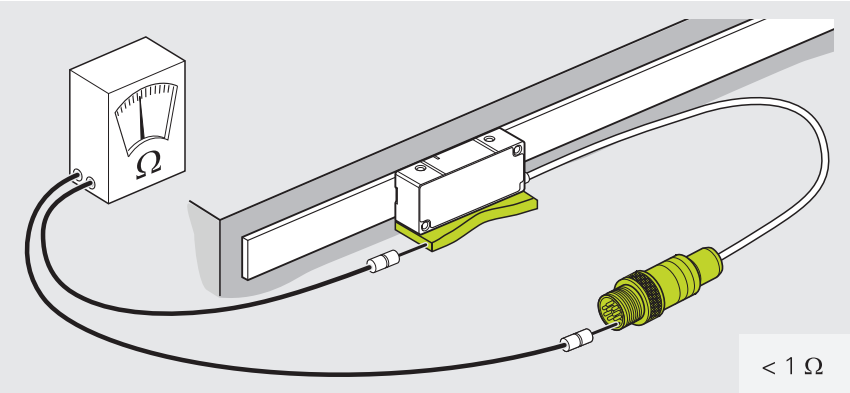

5.3 Connecting the encoder to the ATS

5.3.1 Connecting the encoder

- Connect the encoder to the PWM 21
- Switch on the PWM 21

5.3.2 Selecting the connection

Connection options	
Connecting the encoder using its ID	**Connecting the encoder manually**
Recommended option with automatic determination of the measuring parameters. **Page 29**	Alternative option if the encoder cannot be connected using its ID. **Page 30**

5.3.3 Connecting the encoder using its ID

- ▶ Double-click **Connect the encoder** in the function menu
- > The **Encoder selection** dialog opens

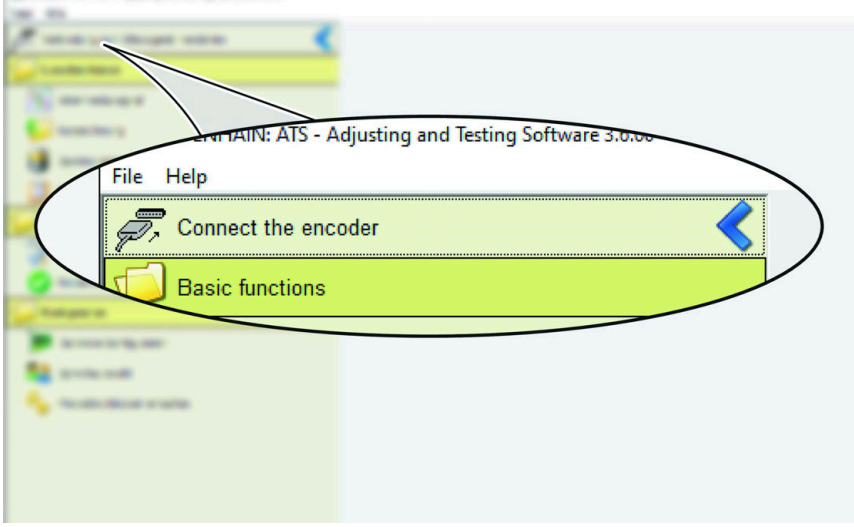

Function menu

- ▶ Enter the encoder ID in the **ID number** field
- > The determined encoder parameters are shown in the **Encoder data** field.
- ▶ Click **Connect**
- > The connection to the encoder is established.
- > The **Function menu** opens.

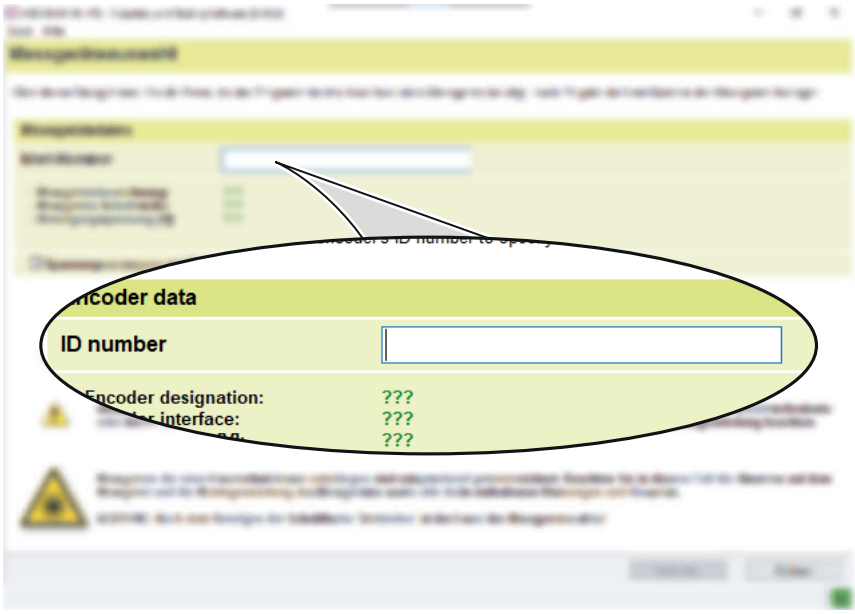

The **Encoder selection** dialog

> If you cannot connect the encoder using its ID, proceed as described in the **"Connecting the encoder manually"** chapter.

Next step: "Mounting the scanning head", Page 33

5.3.4 Connecting the encoder manually

- Double-click **Connect the encoder** in the function menu
- > The **Encoder selection** dialog opens.

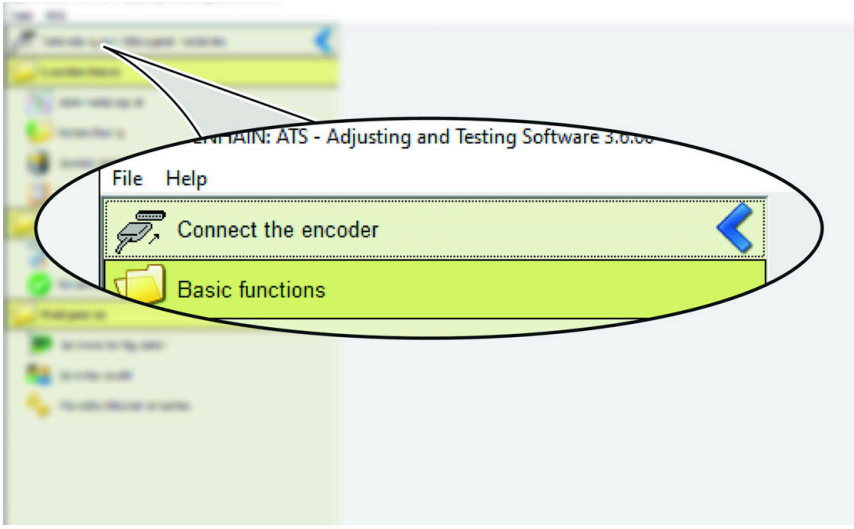

Function menu

- Click **Manual Settings**
- > The **Encoder selection** dialog opens.

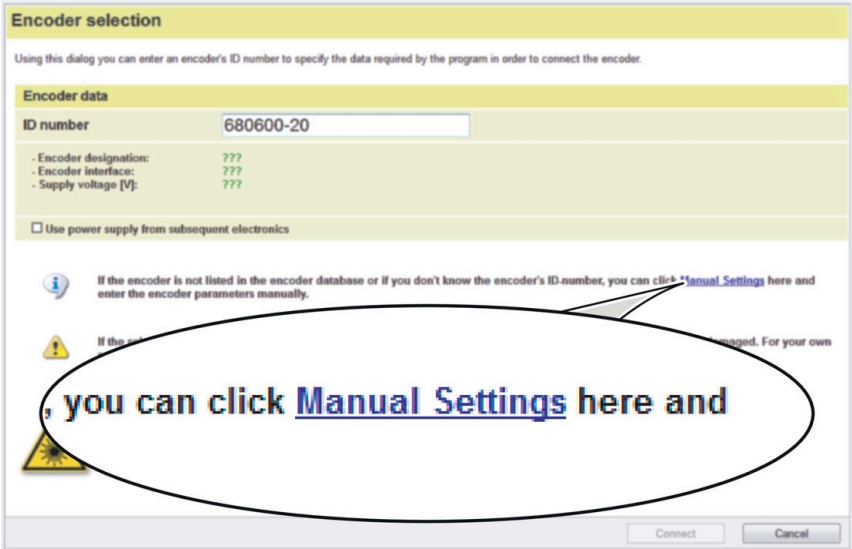

The **Encoder selection** dialog

- Follow the safety instructions
- Click **Next**
- > The **Encoder selection** dialog opens.

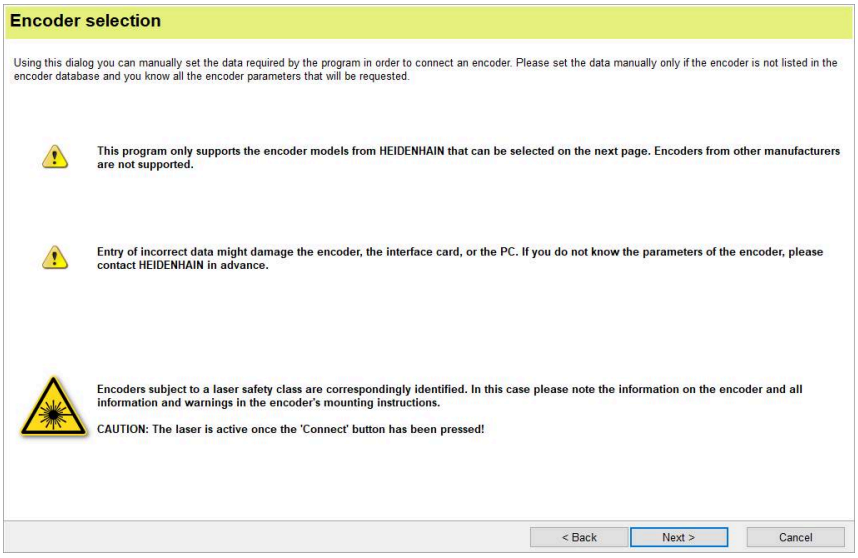

The **Encoder selection** dialog

For more information on the supply voltage and interfaces, refer to the **Exposed Linear Encoders** brochure.
- **www.heidenhain.com/documentation**
- Enter the document ID **208960**

- Select the permissible encoder supply voltage in the **Encoder supply voltage** section
- To deactivate voltage readjustment by the PWM, deselect the **Adjust voltage over sensor lines** checkbox
- Select the interface type in the **Encoder interface** section
- Click **Mounting code**
- > The **Entry of ATS code** message appears.

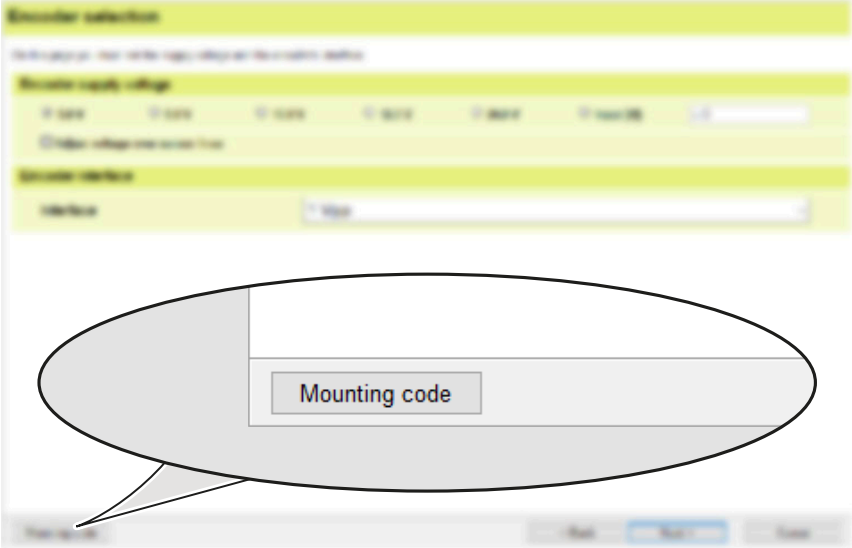

The **Encoder selection** dialog

- Click **OK**
- > The **Encoder selection** dialog with the mounting code opens.

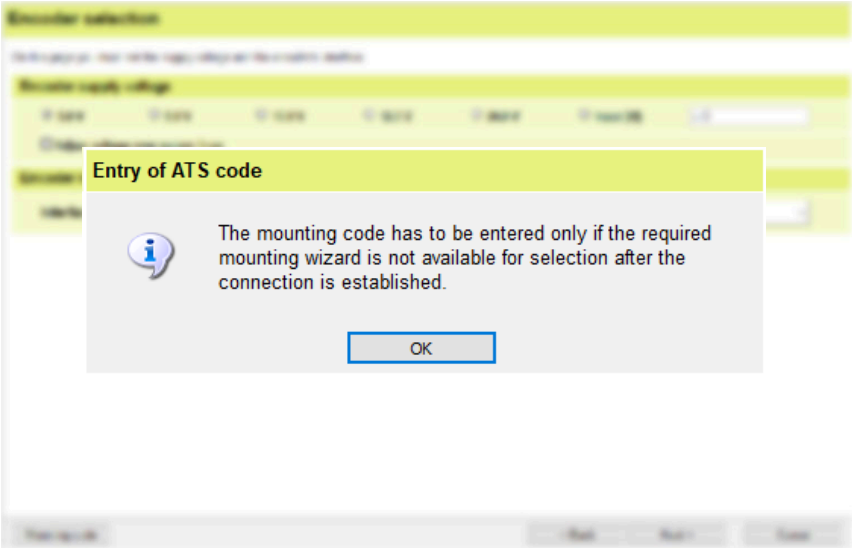

The **Entry of ATS code** message

- For the **Mounting code**, enter the value:
  E001-A005F
- Click **Next**
- > The **Encoder selection** dialog with the encoder data opens.

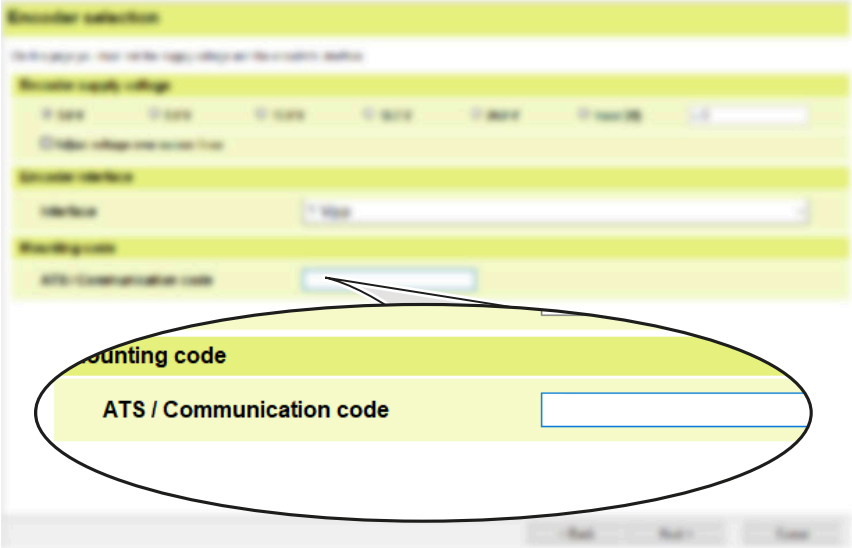

The **Encoder selection** dialog with the mounting code

NOTICE

Property damage due to incorrect data settings!

Incorrect data settings can cause damage to the interface card or the PC.

- Before connecting the encoder, check the encoder data

Encoder interface:	EnDat22
Supply voltage [V]:	5.0
Voltage adjustment:	No

- Click **Connect**
- > The connection to the encoder is established.
- > The **Function menu** opens.

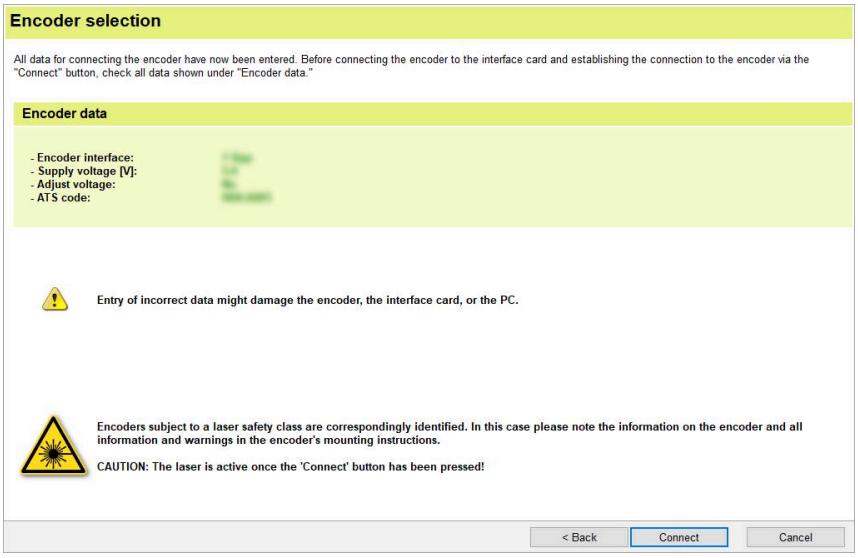

The **Encoder selection** dialog with the encoder data

Next step: "Mounting the scanning head", Page 33

5.4 Mounting the scanning head

5.4.1 Using the mounting wizard

- Double-click **LIC mounting**
- > The **LIC mounting wizard** opens.

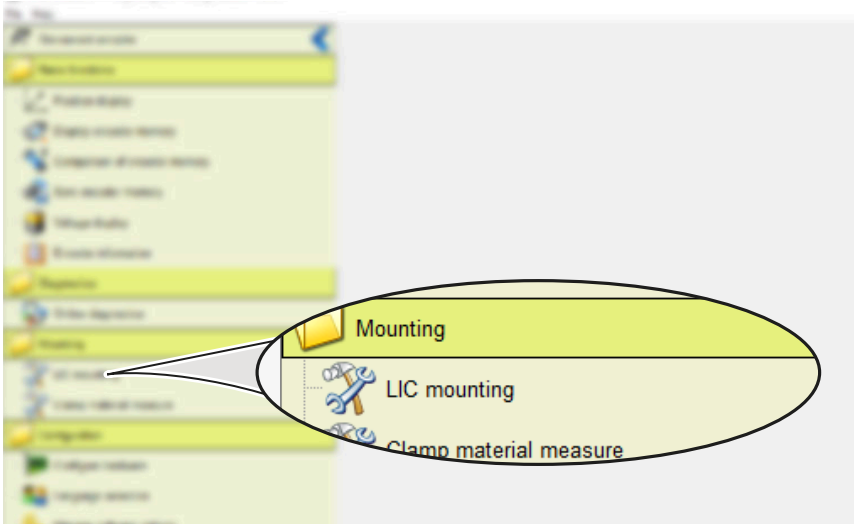

Function menu

Adjust the scanning head in the area of the midpoint of the measuring length.

- Set the absolute track to the maximum attainable bar length by slightly turning the scanning head
- Tighten the screws with the specified torque
- Click **Next**
- > The **Step 2: Verify mounting** dialog opens.

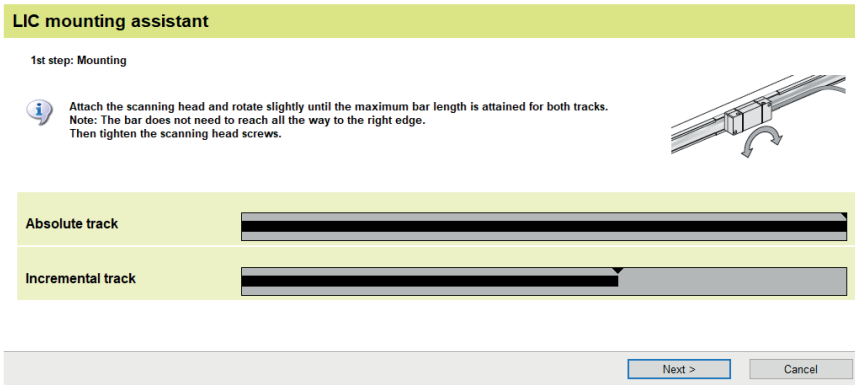

> **i** If an error message occurs, it is because the maximum incremental signal was not achieved.
>
> - Repeat the installation

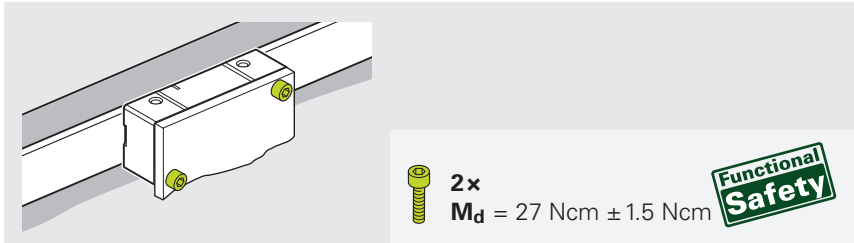

- Traverse the scanning head over the entire measuring length
- Ensure that the minimum markers remain within the green ranges

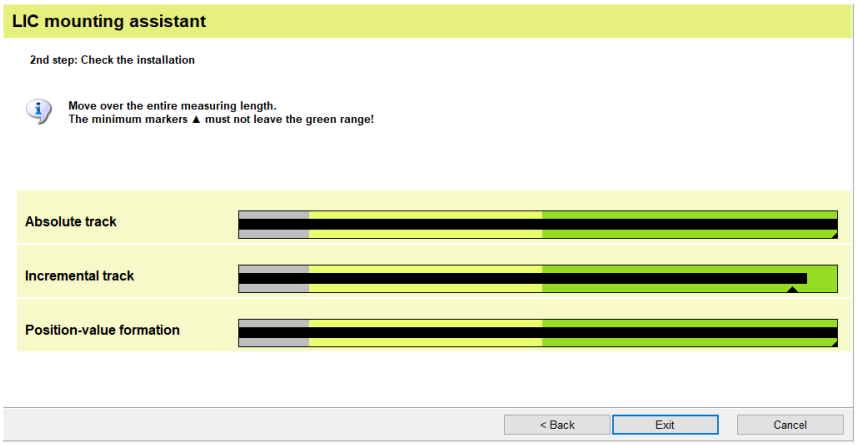

> **i** If the green ranges are not reached or if strong signal fluctuations occur over the entire measuring length, check the mounting tolerances and inspect for contamination.

- Click **Exit**
> The **Installation successful and functional safety encoder check** message appears.

- Click **OK**
> The functional safety encoder check is performed.

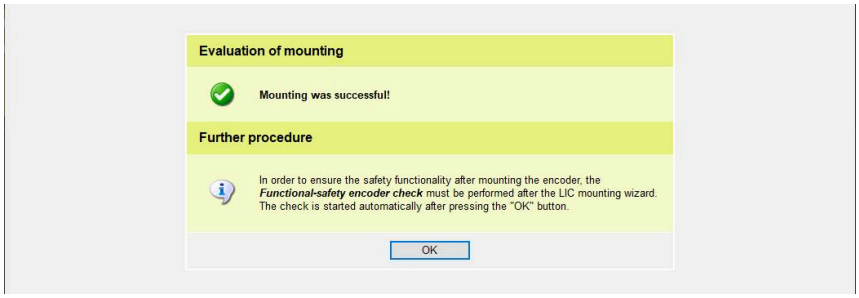

The additional description can be found under **Help** > **User's Manual**

Chapter: Checking the functional safety of the encoder

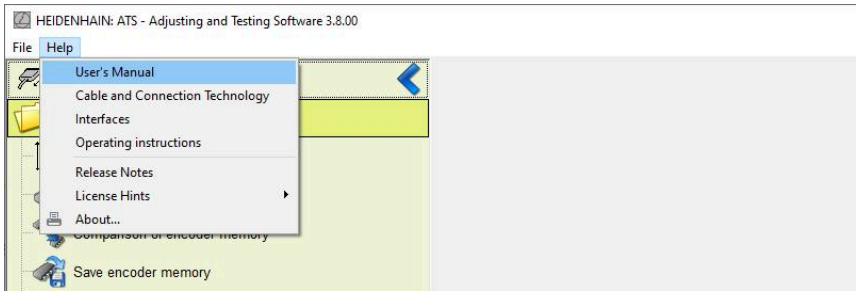

- Double-click **Disconnect encoder**

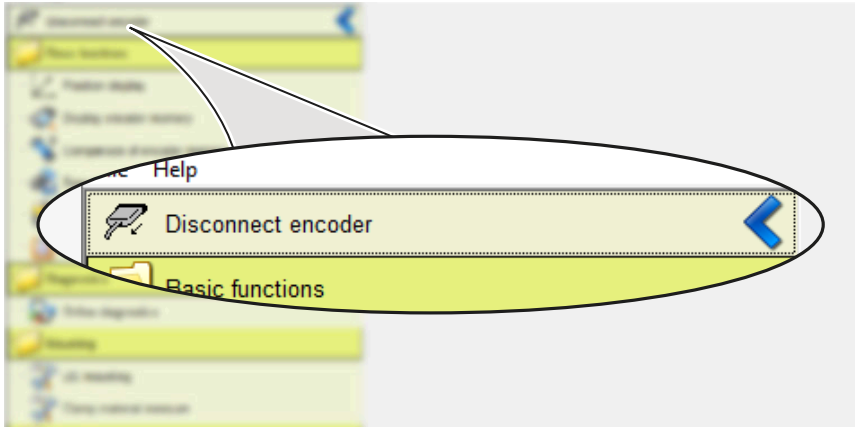

Next step "Final steps", Page 35

6 Final steps

6.1 Connecting the encoder with the downstream electronics

⚠ WARNING

Danger of electric shock due to plug connections under voltage!

Connecting and disconnecting live cables and plug connections in the equipment can result in death or serious injury.

- Only connect and disconnect cables and plug connections when no current is flowing through them
- Disconnect the downstream electronics from power before connecting the product
- For cables without connectors, pay attention to the pin layout

▶ Connect the encoder to the downstream electronics

NOTICE

Property damage resulting from incorrect routing of the connecting cable!

Connecting cables may become damaged as a result of incorrect routing.

- ▶ Observe the maximum permissible bend radii
- ▶ Do not cross connecting cables in drag chains
- ▶ Route connecting cables professionally

For more information on the cable characteristics and cable routing, refer to the **Cables and Connectors** brochure.

- ▶ **www.heidenhain.com/documentation**
- ▶ Enter the document ID **1206103**

For more information on the pin layouts, refer to the **Cables and Connectors** brochure.

- ▶ **www.heidenhain.com/documentation**
- ▶ Enter the document ID **1206103**

For more information on sources of interference, refer to the **Interfaces of HEIDENHAIN Encoders** brochure.

- ▶ **www.heidenhain.com/documentation**
- ▶ Enter the document ID **1078628**

7 Removal

This chapter describes the removal of the product.

7.1 Safety precautions regarding removal

⚠ WARNING

Live plug connections!

If you disengage plug connections while the equipment is under power, this may result in fatal accidents or severe personal injury.

- Do not engage or disengage any connecting elements while the product is under power

⚠ WARNING

Moving machine parts!

Risk of injury due to moving machine parts depending on the installation location and the application

- Observe all of the machine manufacturer's notes on working on the machine, e.g., always disconnect the machine from the power supply

⚠ CAUTION

Fragile carrier material of the scale tape!

Risk of injury from splinters and sharp edges of the carrier material

- Wear protective gloves and safety goggles
- Do not bend or deform the scale tape excessively

7.2 Removing the scanning head

- Remove the scanning head in the reversed sequence of mounting. **Further information:** "Mounting the scanning head", Page 17

7.3 Disassembling the parts kit

Further information can be found in the **Disassembly Instructions**.

- **www.heidenhain.com/documentation**
- Enter the document ID **1185755**

HEIDENHAIN

DR. JOHANNES HEIDENHAIN GmbH
Dr.-Johannes-Heidenhain-Straße 5
83301 Traunreut, Germany
☏ +49 8669 31-0
FAX +49 8669 32-5061
info@heidenhain.de

Technical support FAX +49 8669 32-1000
Measuring systems ☏ +49 8669 31-3104
service.ms-support@heidenhain.de
NC support ☏ +49 8669 31-3101
service.nc-support@heidenhain.de
NC programming ☏ +49 8669 31-3103
service.nc-pgm@heidenhain.de
PLC programming ☏ +49 8669 31-3102
service.plc@heidenhain.de
APP programming ☏ +49 8669 31-3106
service.app@heidenhain.de

www.heidenhain.com

Original document
1436296 · Ver00 · 02