WELLA1=77A

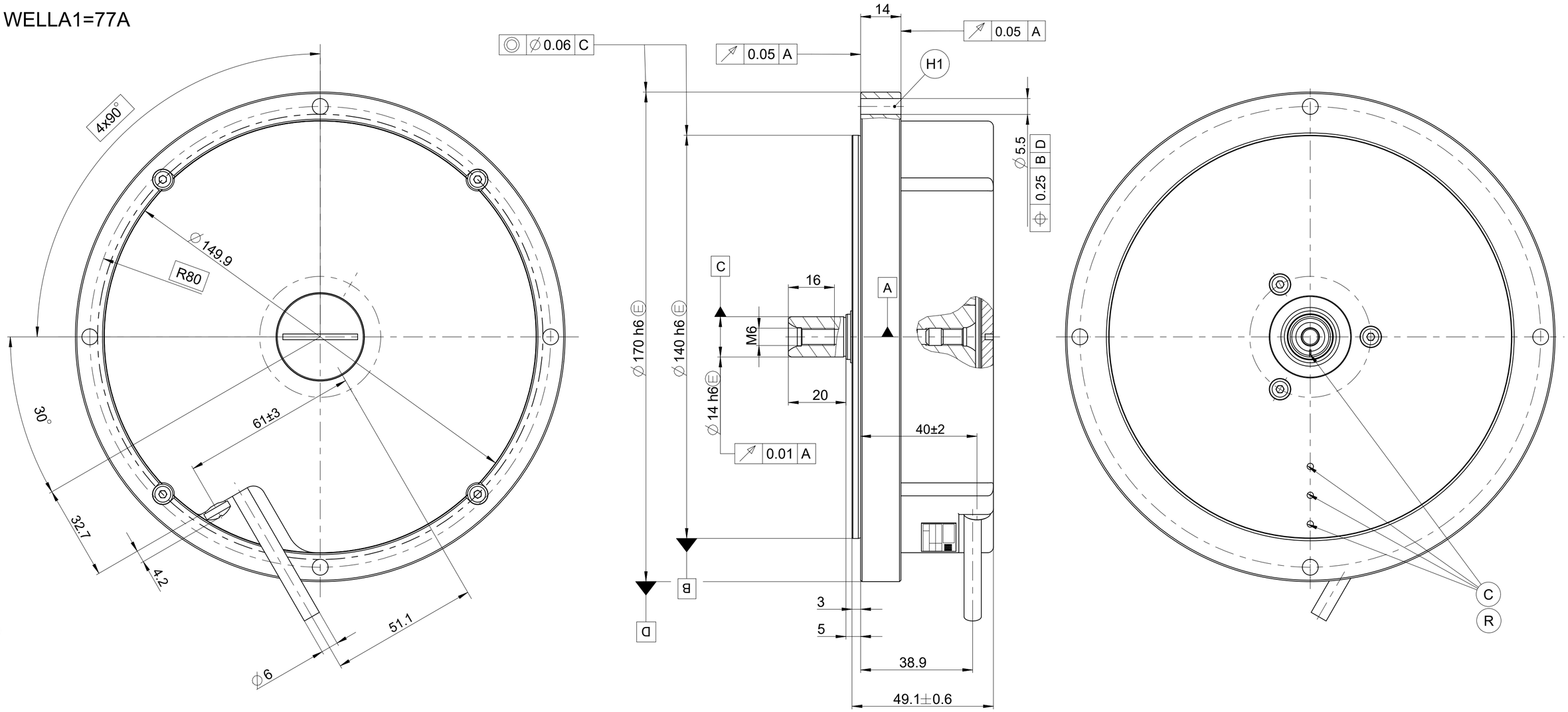

WELLA1=78A

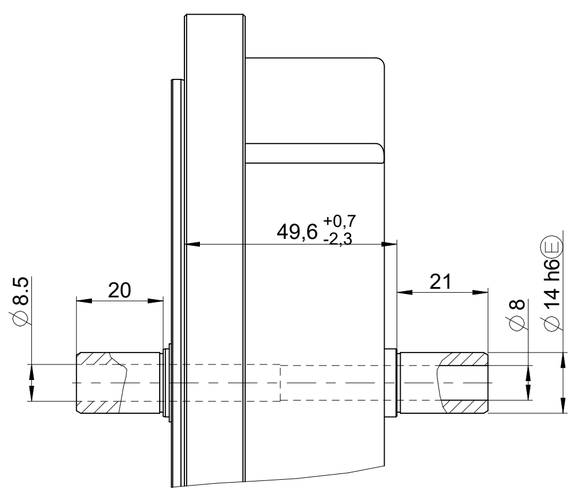

A = Lagerung

R = Referenzmarken-Lage ±5°
ROD 7xx/ROD 8xx

C = Referenzmarken-Lage ±5°
ROD 7xxC/8xxC

H1 Anziehdrehmoment der
Zylinderschraube M5: 5±0,2Nm
Schraube ISO 4762-A2-M5
Scheibe ISO 7092-5-200HV-A2
Schraubensicherung erforderlich

Bearing

Reference mark position ±5°
ROD 7xx/8xx

Reference mark position ±5°
ROD 7xxC/8xxC

Tightening torque of the hexagon socked
head cap screw M5: 5±0,2N
Screw ISO 4762-A2-M5
Washer ISO 7092-5-200HV-A2
Screw locking necessary

886 200 A2

				ID number:
				Change No. C088784-10
				Phase: Serie
Original drawing	Scale	Format	ROD 7xx/8xx redesign 2002	Tolerierung nach DIN ISO 8015
			ROD 7xx/8xx Redesign 2002	Tolerances as per DIN ISO 8015
Dimensions in mm	1:1	A2	Anschlussmaße / Mating Dimensions	Allgemeintol. ISO 2768-mH ≤6mm:±0,2
				General tol. ISO 2768-mH ≤6mm:±0,2

The reproduction, distribution and utilization of this document as well as the communication of its contents to others without express authorization is prohibited. Offenders will be held liable for the payment of damages. All rights reserved in the event of the grant of a patent, utility model or design. (ISO 16016)

HEIDENHAIN
DR. JOHANNES HEIDENHAIN GmbH
83301 Traunreut, Germany

Version	Revision	Sheet	Page
D 384389-05-A-01			1 of 1

Document number