| Passmass | Abmasse |
|---|---|
| | |
| | |

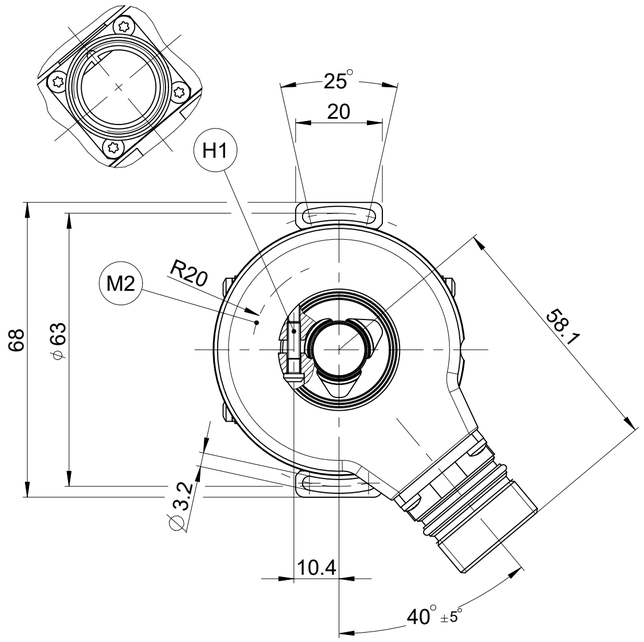


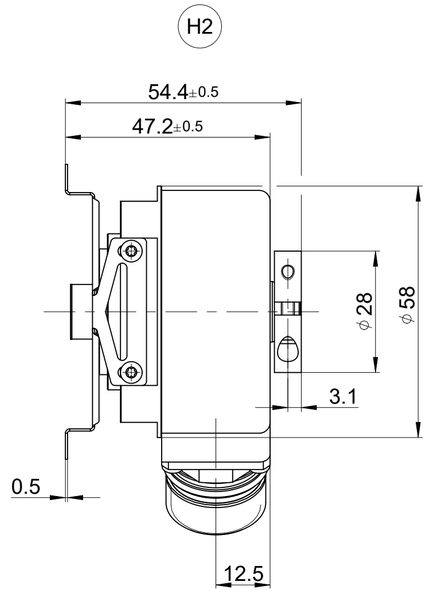


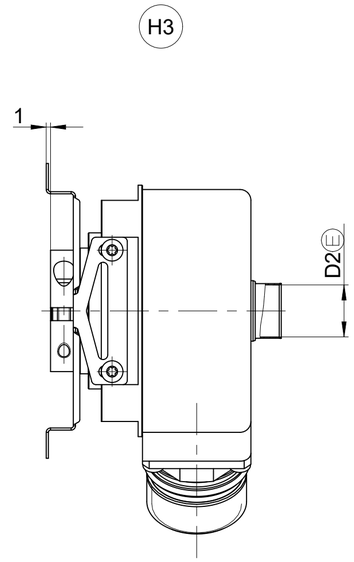


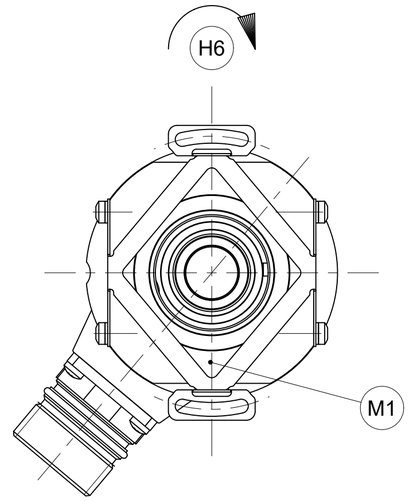


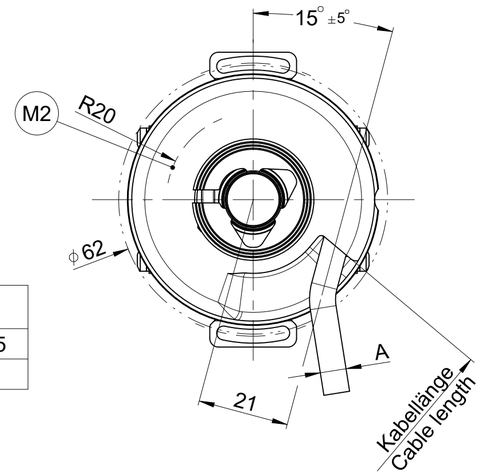


| KABEA2 | A |
|---|---|
| 01 | ϕ4,5 |
| 02 | ϕ6 |

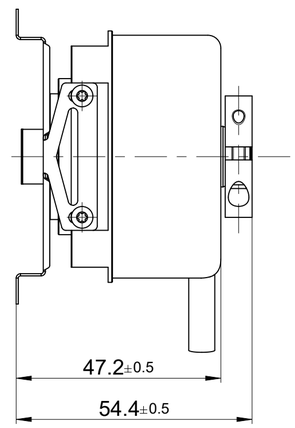


A = Lagerung Kundenwelle — Bearing of mating shaft

K = Kundenseitige Anschlussmaße — Required mating dimensions

M1 = Messpunkt Arbeitstemperatur — Measuring point for operating temperature

M2 = Messpunkt Vibration — Measuring point for vibration

H1 = Klemmschraube
mit Innensechsrund X8
Anzugsmoment: 1,1 ±0,1 Nm

Locking screw
with hexalobular recesses X8
Tightening torque: 1.1 ±0.1 Nm

H2 = Ausführung Klemmring auf Kappenseite
(Lieferzustand)

Model with clamping ring on cap side
(Condition upon delivery)

H3 = Ausführung Klemmring auf Kupplungsseite
(wahlweise montierbar)

Model with clamping ring on coupling side
(Selectable mounting positions)

H4 = Ausgleich von Montagetoleranzen und
thermischer Ausdehnung,
keine dynamische Bewegung

Compensation of mounting tolerances
and thermal expansion,
no dynamic motion

H5 = Berührschutz nach EN 60529

Protection according to EN 60529

H6 = Drehrichtung der Welle für Ausgangssignale
gemäß Schnittstellenbeschreibung

Direction of shaft rotation according to
interface description

H7 = Befestigung Statorkupplung
z. B. 4x ISO 4762 - 8.8 - MKL M3x10
Anzugsmoment: 1 ±0,06Nm

Fastening stator coupling
e. g. 4x ISO 4762 - 8.8 - MKL M3x10
Tightening torque: 1 ±0.06Nm

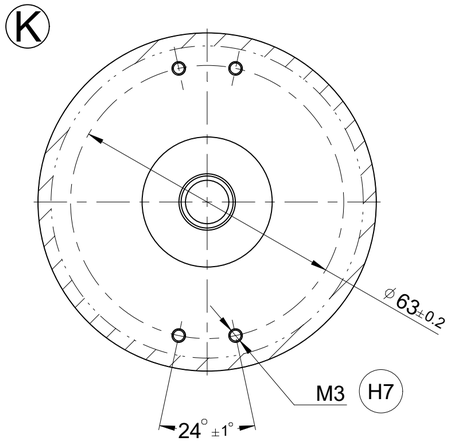


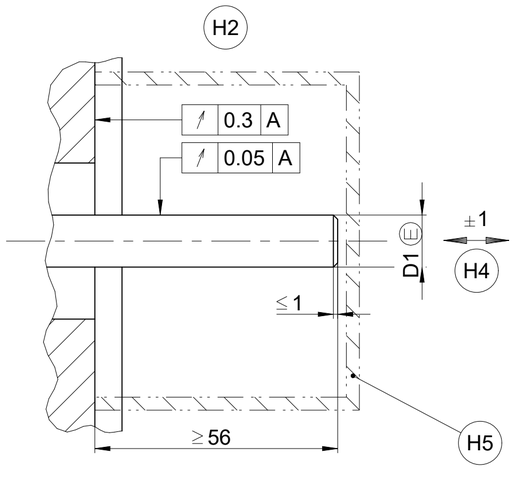


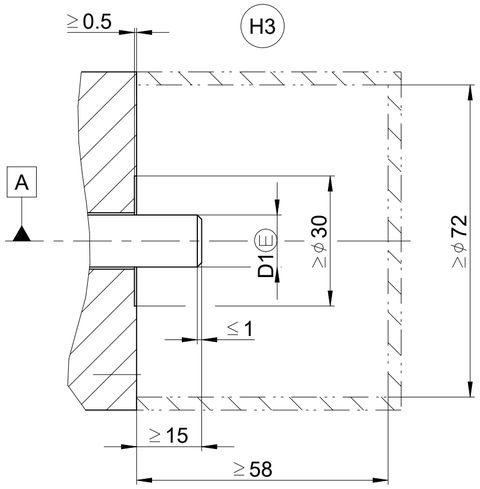


| | | | |
|---|---|---|---|
| 70E | ϕ14 H7 | ϕ14 g7 | 14 |
| 70C | ϕ12 H7 | ϕ12 g7 | 14 |
| 70B | ϕ10 H7 | ϕ10 g7 | 14 |
| 70D | ϕ9,52 H7 | ϕ9,52 g7 | 14 |
| 70A | ϕ8 H7 | ϕ8 g7 | 14 |
| WELLA1 | D2 | D1 | KUPPA1 |

ID number:
Change No. C172391-15
Phase: Serie

Original drawing — Scale 1:1 — Format A2
Dimensions in mm

ERN/ECN/EQN 4xx
ERN/ECN/EQN 4xx
Anschlussmaße / Mating Dimensions

Tolerances as per ISO 8015
General Tolerances ISO 2768:1989-mH ≦6mm:±0,2

The reproduction, distribution and utilization of this document as well as the communication of its contents to others without express authorization is prohibited. Offenders will be held liable for the payment of damages. All rights reserved in the event of the grant of a patent, utility model or design. ( ISO 16016 )

HEIDENHAIN
DR. JOHANNES HEIDENHAIN GmbH
83301 Traunreut, Germany

Released: 06.10.2025
Version | Revision | Sheet | Page
Document number: D 374271-12-A-01
Page 1 of 1

886 200 A2