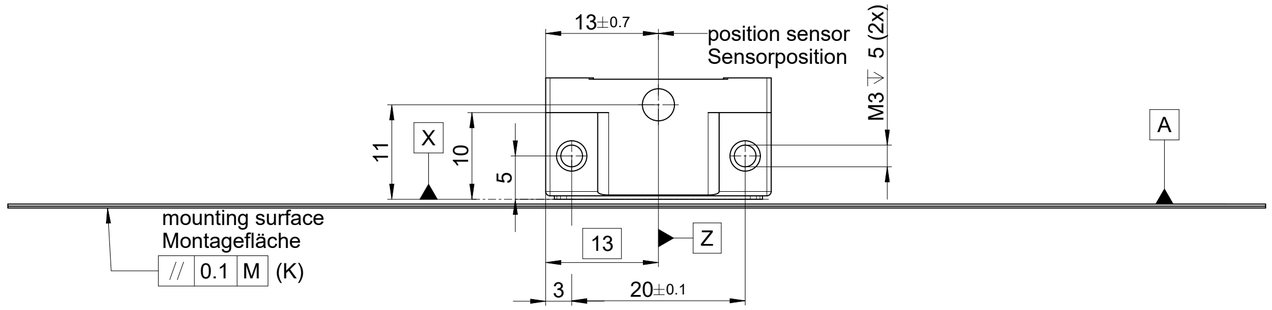

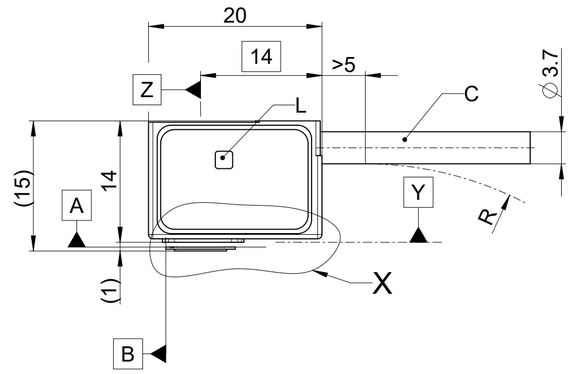

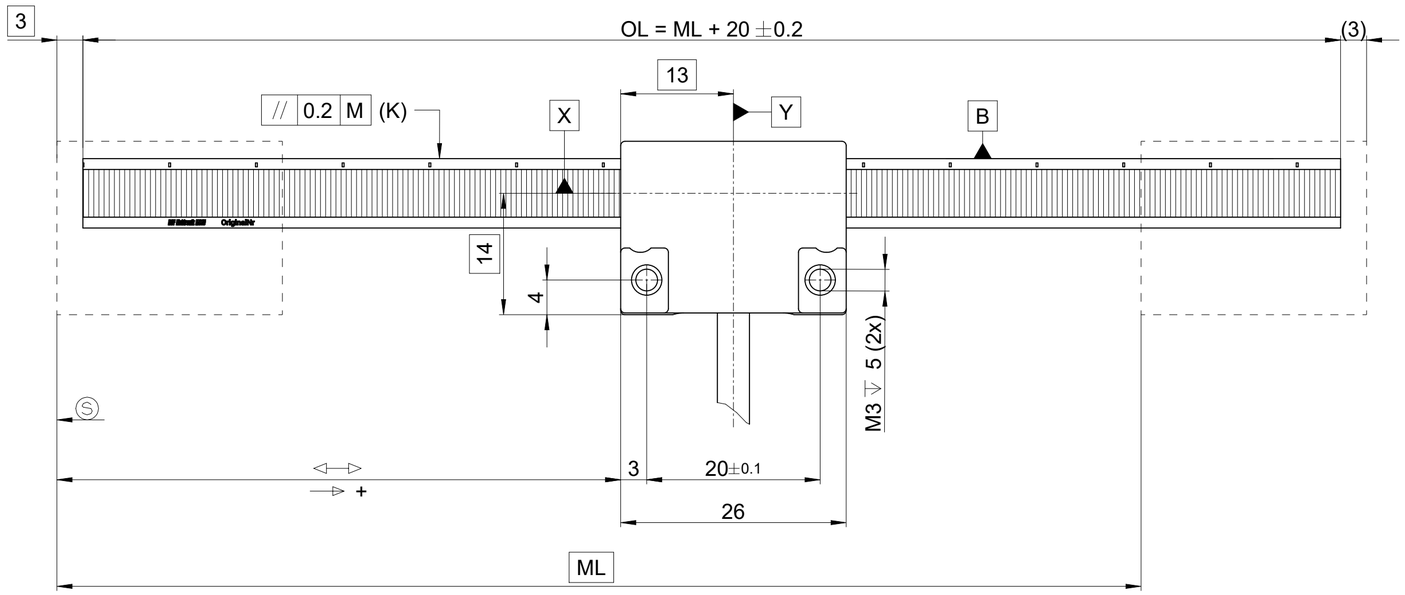

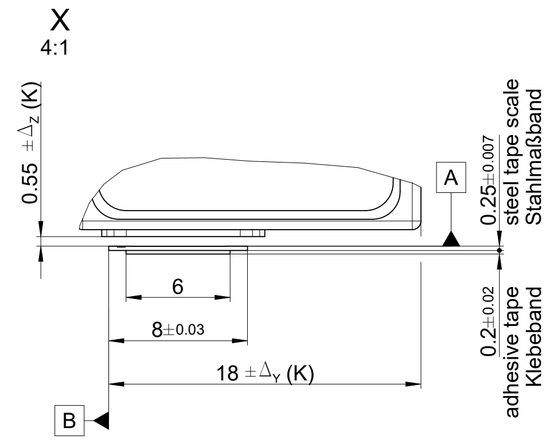

M = machine guideway / Maschinenführung
ML = measuring length / Messlänge
OL = overall length / Gesamtlänge
⇔ = S...S+ML
→ + = direction of motion of the scanning unit for ascending position values
Bewegungsrichtung des Abtastkopfes für steigende Positionswerte
Ⓢ = code start value not defined (standard) / Codestartwert nicht definiert (Standard)
code start value on customer request ≥ 16mm (optional) / Codestartwert nach Kundenwundsch ≥ 16mm (optional)
C = cable / Anschlusskabel
K = customer mounting dimensions / kundenseitige Anschlussmaße
L = LED function display / LED Funktionsanzeige
R = bending radius / Biegeradius: stat. R ≥ 8mm, dyn. R ≥ 40mm

Permissible position deviation scanning head - scale tape | A | B |
Zulässige Lageabweichungen Abtastkopf - Maßband | A | B |
Δ_Z = ± 0.25mm (airgap / Abstand)
Δ_Y = ± 1.0mm (lateral / Verschiebung)
φ_Z = ± 20mrad or / oder 1.15° (yaw angle / Gierwinkel)
φ_Y = ± 20mrad or / oder 1.15° (pitch angle / Nickwinkel)
φ_X = ± 20mrad or / oder 1.15° (roll angle / Rollwinkel)

				ID number:
				Change No. C163843-10
				~~Phase: Nicht Serie~~
Original drawing		MC15xL MK		Tolerances as per ISO 8015
Scale	Format	MC15xL MK		
Dimensions in mm	2:1	A2	Anschlussmaße / Mating Dimensions	General Tolerances ISO 2768:1989-mH ≤ 6:±0.2

The reproduction, distribution and utilization of this document as well as the communication of its contents to others without express authorization is prohibited. Offenders will be held liable for the payment of damages. All rights reserved in the event of the grant of a patent, utility model or design. (ISO 16016)

RSF Elektronik
www.rsf.at

Released	Version	Revision	Sheet	Page
20.02.2024	D1430876-00-E-01			1 of 1
	Document number			

1 213 928 A2