Variante 01: Ansicht ohne Zubehör
Variant 01: View without accessories

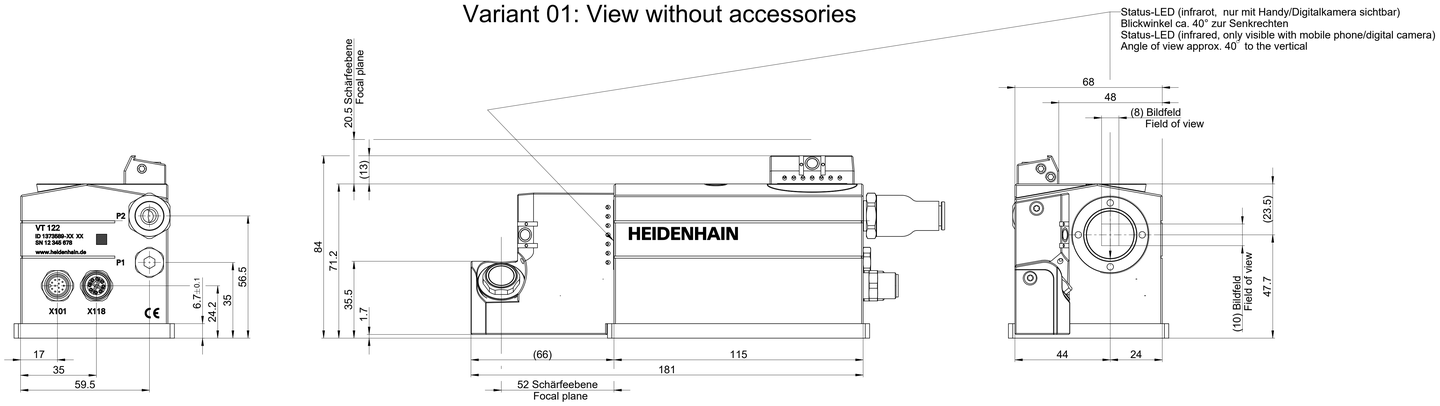

Variante 01: Ansicht mit Spannpratzen und Kabeln/Druckluftleitungen
Variant 01: View with fixing clamps, cables and compressed-air tubes

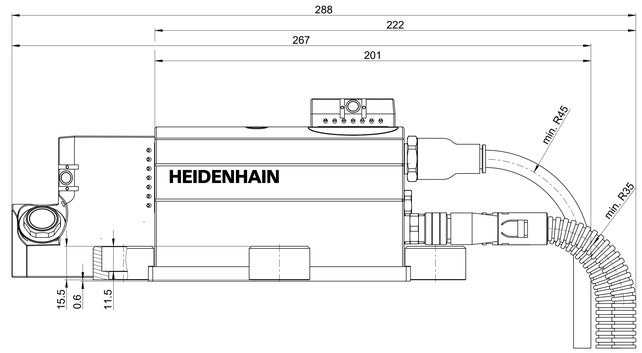

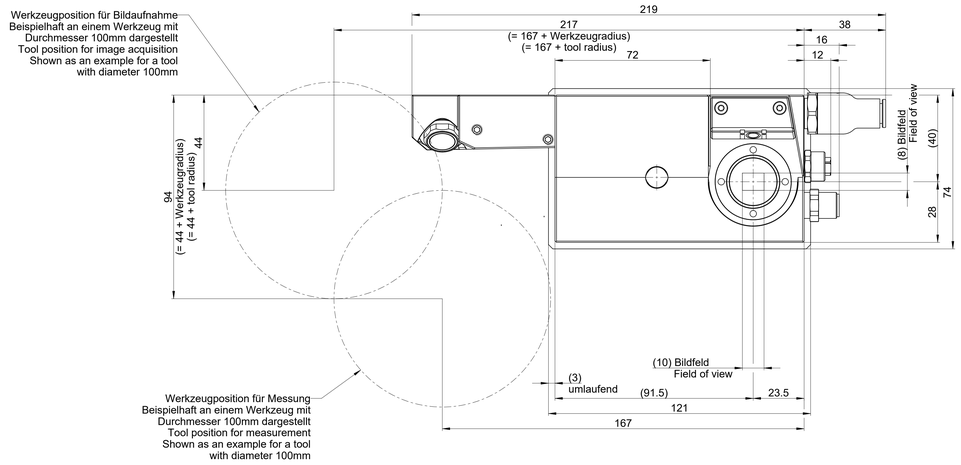

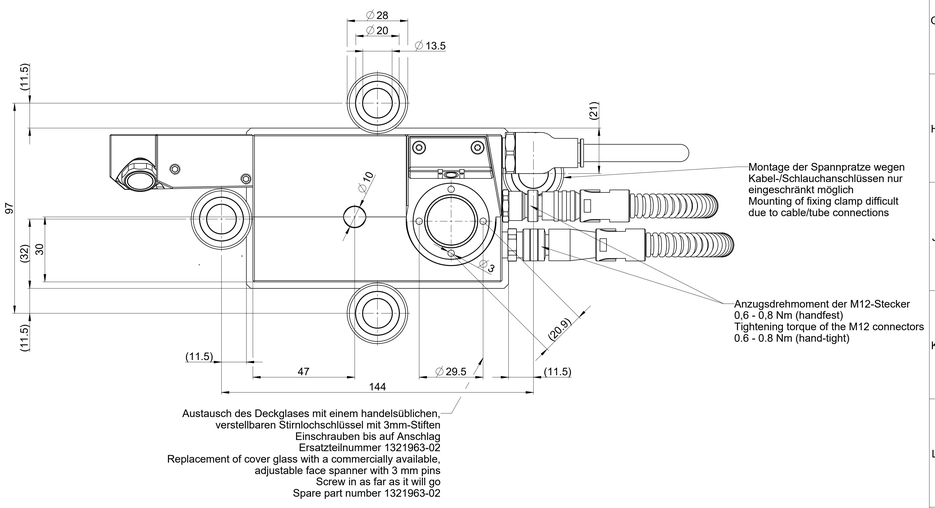

Variante 02: Ansicht ohne Zubehör
Variant 02: View without accessories

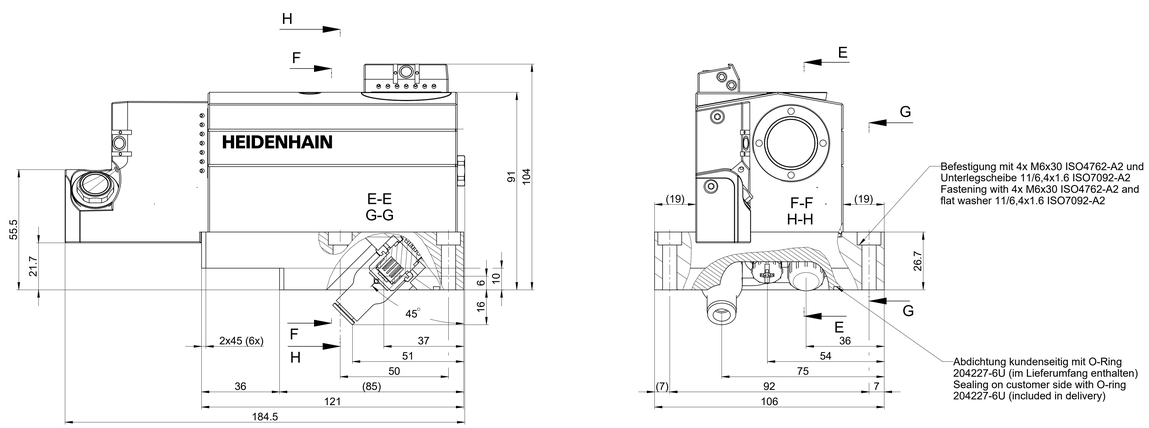

Variante 01: Ansicht mit Schutzkappen
Variant 01: View with protective caps

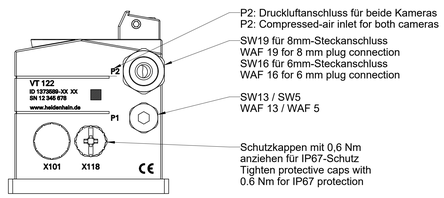

ID number:	1373589-01
Change No.	1373589-02
Phase:	C139262-33
	Serie
Original drawing	VT 122
Scale: 1:1	VT 122
Format: A0	Anschlussmaße / Mating Dimensions
Dimensions in mm	Tolerances as per ISO 8015
	General Tolerances ISO 2768:1989-mH ±6mm:±0.2

The reproduction, distribution and utilization of this document as well as the communication of its contents to others without express authorization is prohibited. Offenders will be held liable for the payment of damages. All rights reserved in the event of the grant of a patent, utility model or design. (ISO 16016)

HEIDENHAIN
DR. JOHANNES HEIDENHAIN GmbH
83301 Traunreut, Germany

Released	Version	Revision	Sheet	Page
19.07.2024	D1411179-01	A	01	1 of 1

Document number

889 200 A01