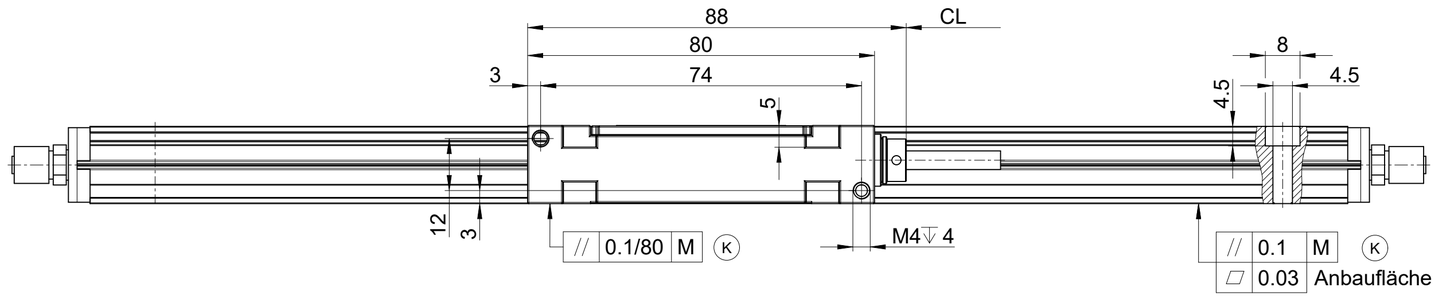

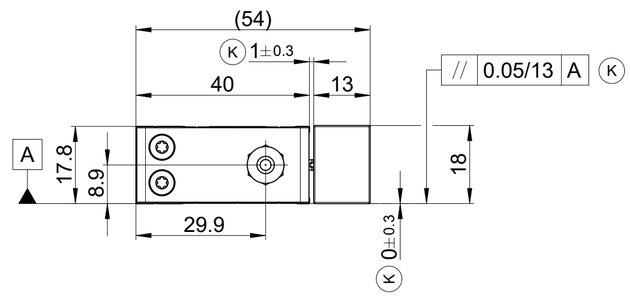

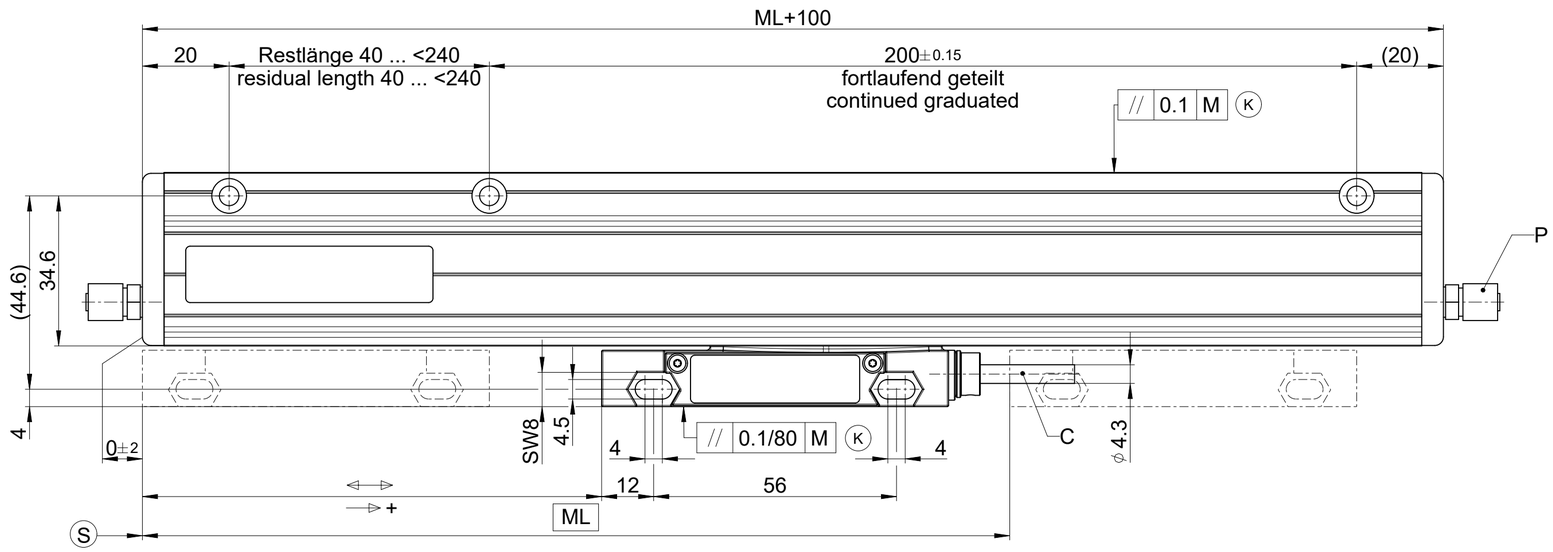

Kabel mit Schutzschlauch
cable with Armor

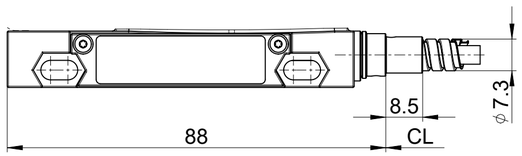

M = Maschinenführung / machine guideway
ML = Messlänge / measuring length
⟷ = 0 ... ML
→ + = Bewegungsrichtung der Abtasteinheit für steigende Positionswerte
direction of motion of the scanning unit for ascending position values
S = Beginn der Messlänge ML / beginning of the measuring length ML
C = Anschlusskabel / cable
CL = Kabellänge / cable length
P = Luftanschluss / air inlet
K = kundenseitige Anbaumaße / required mating dimensions

				ID number:
				Change No. C180316-87
				Phase: Serie
Original drawing	Scale	Format	MSA671	Tolerances as per ISO 8015
Dimensions in mm	1:1	A2	MSA671 Anschlussmaße / Mating Dimensions	General Tolerances ISO 2768:1989-mH ≤ 6:±0.2

The reproduction, distribution and utilization of this document as well as the communication of its contents to others without express authorization is prohibited. Offenders will be held liable for the payment of damages. All rights reserved in the event of the grant of a patent, utility model or design. (ISO 16016)

RSF Elektronik www.rsf.at	Released	Version	Revision	Sheet	Page
	02.07.2025	D1340474-01-A-01			1 of 1
		Document number			

1 213 928 A2