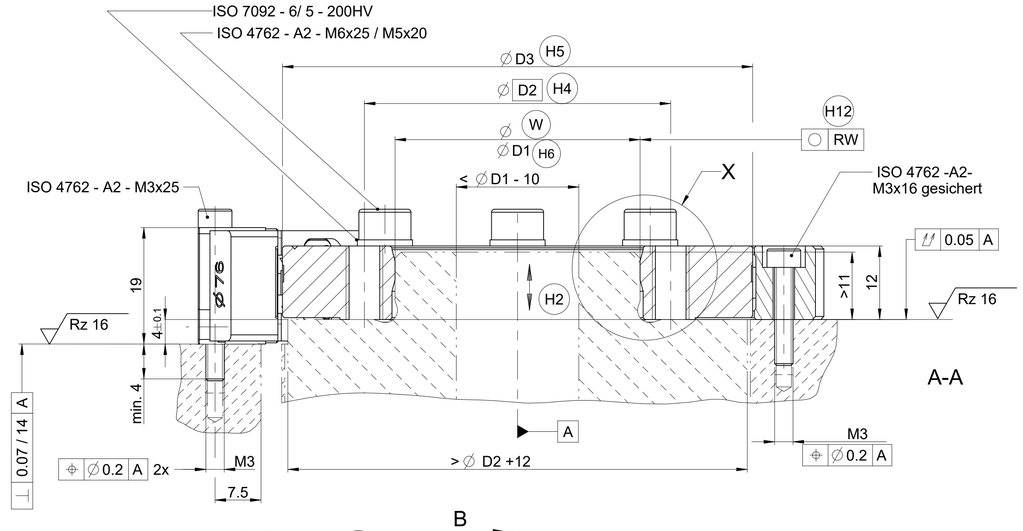


A-A

Konstruktionsvorschlag für
Freistich
construction proposal for
undercut

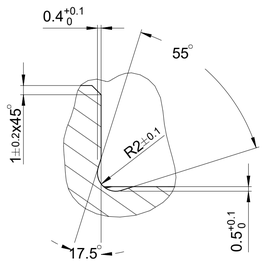


Sperrluftabdeckung
Protective cover

1:1

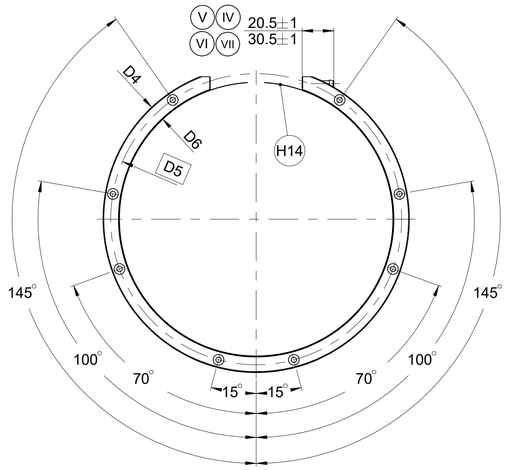


C-C

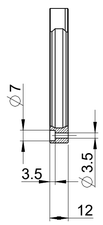


1:1

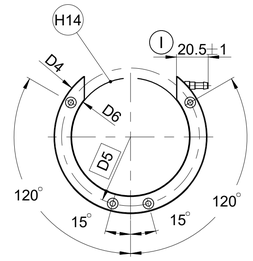


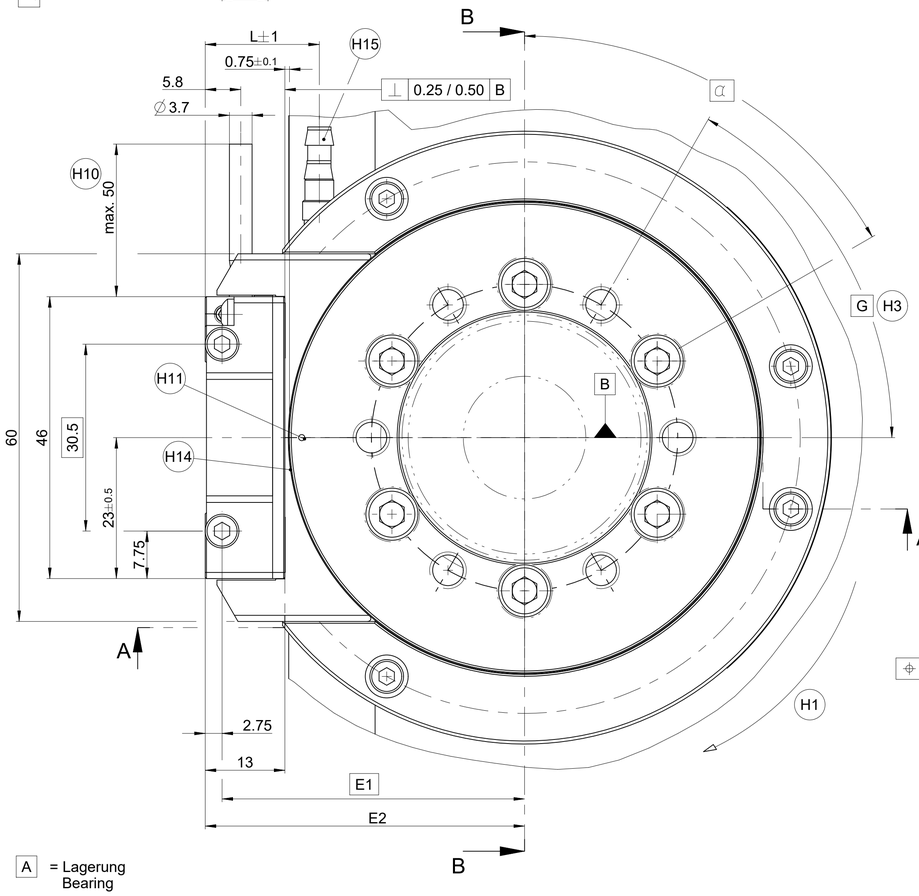


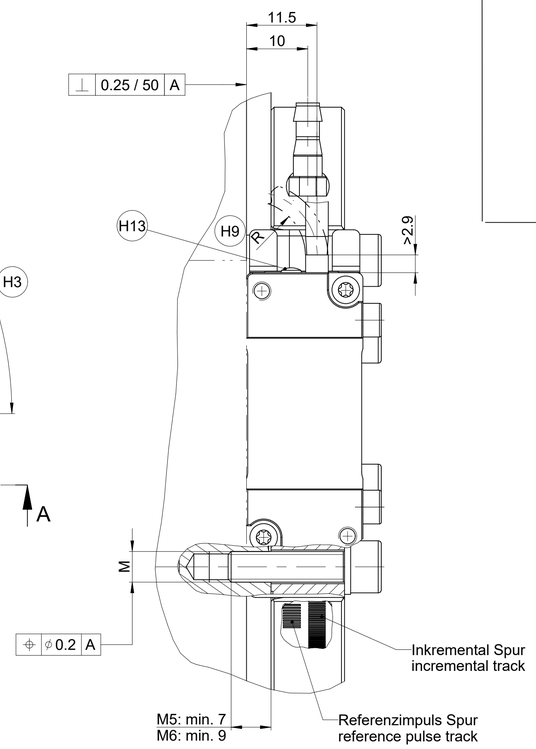


B-B

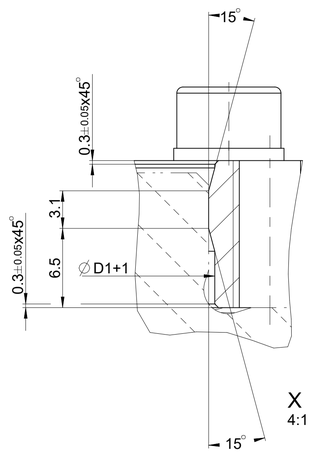


X
4:1

1:1

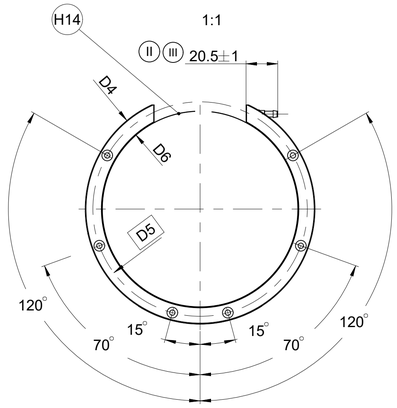


| | I | II | III | IV | V | VI | VII |
|---|---|---|---|---|---|---|---|
| ∅D3 | 76.75 | 104.63 | 127.64 | 178.55 | 208.89 | 254.93 | 331.31 |
| ∅D4 | 100 | 127 | 150 | 200 | 232 | 278 | 354 |
| ∅D5 | 90 | 117 | 140 | 190 | 222 | 268 | 344 |
| ∅D6 | 77.2 | 105,2 | 128.2 | 179.1 | 209,4 | 255.6 | 332 |
| L | 18.6 | 16.5 | 15.5 | 14.5 | 13.2 | 12.7 | 12.1 |

| D1 | W | RW | D2 | D3 | E1 | E2 | α | M | G | Drehzahl n [min⁻¹] H7 |
|---|---|---|---|---|---|---|---|---|---|---|
| ∅512 0 -0,015 | ∅512 +0,016 +0,0 | 0,007 | ∅528 | ∅560,46 | 291,23 | 293,98 | 18x20° = 360° | 18x M6 | 12x M8 | 2750 |
| ∅425 0 -0,01 | ∅425 +0,015 +0,0 | 0,006 | ∅445 | ∅484,07 | 253,04 | 255,79 | 12x30° = 360° | 12x M6 | 12x M6 | 3250 |
| ∅270 0 -0,01 | ∅270 +0,012 +0,0 | 0,003 | ∅290 | ∅331,31 | 176,65 | 179,40 | | 12x M5 | | 4750 |
| ∅180 -0,001 -0,008 | ∅180 +0,01 +0,0 | 0,003 | ∅200 | ∅254,93 | 138,46 | 141,21 | 6x60° = 360° | 6x M5 | 6x M6 | 6250 |
| ∅180 -0,001 -0,008 | ∅180 +0,01 +0,0 | 0,003 | ∅200 | ∅229,46 | 125,73 | 128,48 | | | | 6700 |
| ∅150 -0,001 -0,008 | ∅150 +0,008 +0,0 | 0,002 | ∅165 | ∅208,89 | 115,44 | 118,19 | | | | 7500 |
| ∅120 -0,001 -0,008 | ∅120 +0,008 +0,0 | 0,002 | ∅140 | ∅178,55 | 100,27 | 103,02 | | | | 8750 |
| ∅80 -0,001 -0,005 | ∅80 +0,006 +0,0 | 0,0015 | ∅95 | ∅127,64 | 74,82 | 77,57 | | | | 12250 |
| ∅70 -0,001 -0,005 | ∅70 +0,005 +0,0 | 0,001 | ∅85 | ∅104,63 | 63,32 | 66,07 | | | | 15000 |
| ∅40 -0,001 -0,005 | ∅40 +0,004 +0,000 | 0,001 | ∅50 | ∅76,75 | 49,38 | 52,13 | | | | 20000 |

A = Lagerung
Bearing

W = Aufnahmedurchmesser (Welle)
Adapter-diameter (shaft)

H1 = Positive Drehrichtung
Positive Rotation

H2 = Zul. Axialbewegung der Antriebswelle: ≤ ± 0,5mm
Permissible axial movement: ≤ ± 0,5mm

H3 = Abdrückgewinde
Back-off thread

H4 = Lochkreis Durchmesser
Bolt circle diameter

H5 = Außendurchmesser Teilungstrommel
Outside diameter scale drum

H6 = Innendurchmesser Teilungstrommel
Inside diameter scale drum

H7 = Dauerfestigkeit ($10^7$ Lastwechsel) nach FKM - Richtlinie bei Beachtung von W1 H8
Fatigue strength ($10^7$ load changes) as per FKM - guideline under consideration of W1 H8

H8 = Maximale Exzentrizität der Teilungstrommel im angebauten Zustand e < 10µm
Maximum eccentricity of the scale drum when mounted: e < 10µm

H9 = Biegeradius R des Kabels Kabel fest verlegt
> 8mm Wechselbiegung > 40mm
Bend radius R of cable Rigid configuration
> 8mm Frequent flexing > 40mm

H10 = Kabelabstützung
Cable support

H11 = Markierung für Referenzmarke, Positionstoleranz zu Referenzmarke ±1,0mm
Marking for reference-mark, positional tolerance to reference-mark ±1,0mm

H12 = Rundheit Aufnahmedurchmesser (Welle)
Roundness adapter diameter (shaft)

H13 = Funktionsanzeige
functional display

H14 = Montageabstand Sperrluftabdeckung 0,15 (Abstandsfolie 50xL)
Mounting clearance for protective cover: 0.15 (spacer foil 50xL)

H15 = Anschlußstück für Kunsttstoff- Druckluftschlauch 6x1 mm
Connecting piece for plastic tubing 6x1 mm

886 200 A1

ID number:
Change No. C036744-77
Phase: Serie

Original drawing
Scale 2:1 | Format A1
Dimensions in mm

ERA 4xx0 Generation 2 mit Dichtrahmen
ERA 4xx0 generation 2 w. sealing frame
Anschlussmaße / Mating Dimensions

Tolerierung nach DIN ISO 8015
Tolerances as per DIN ISO 8015

Allgemeintol. ISO 2768-mH ≤6mm:± 0,2
General tol. ISO 2768-mH ≤6mm:± 0,2

The reproduction, distribution and utilization of this document as well as the communication of its contents to others without express authorization is prohibited. Offenders will be held liable for the payment of damages. All rights reserved in the event of the grant of a patent, utility model or design. ( ISO 16016 )

HEIDENHAIN
DR. JOHANNES HEIDENHAIN GmbH
83301 Traunreut, Germany

Version | Revision | Sheet | Page
D1337698-00 - B-01 | 1 of 1
Document number