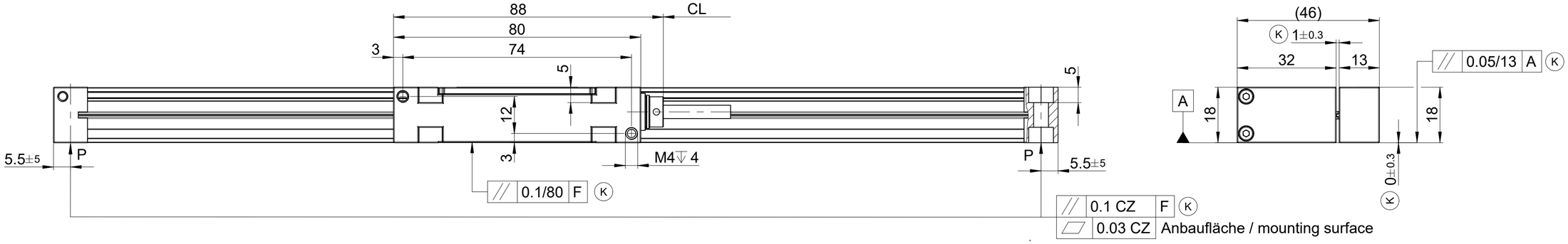

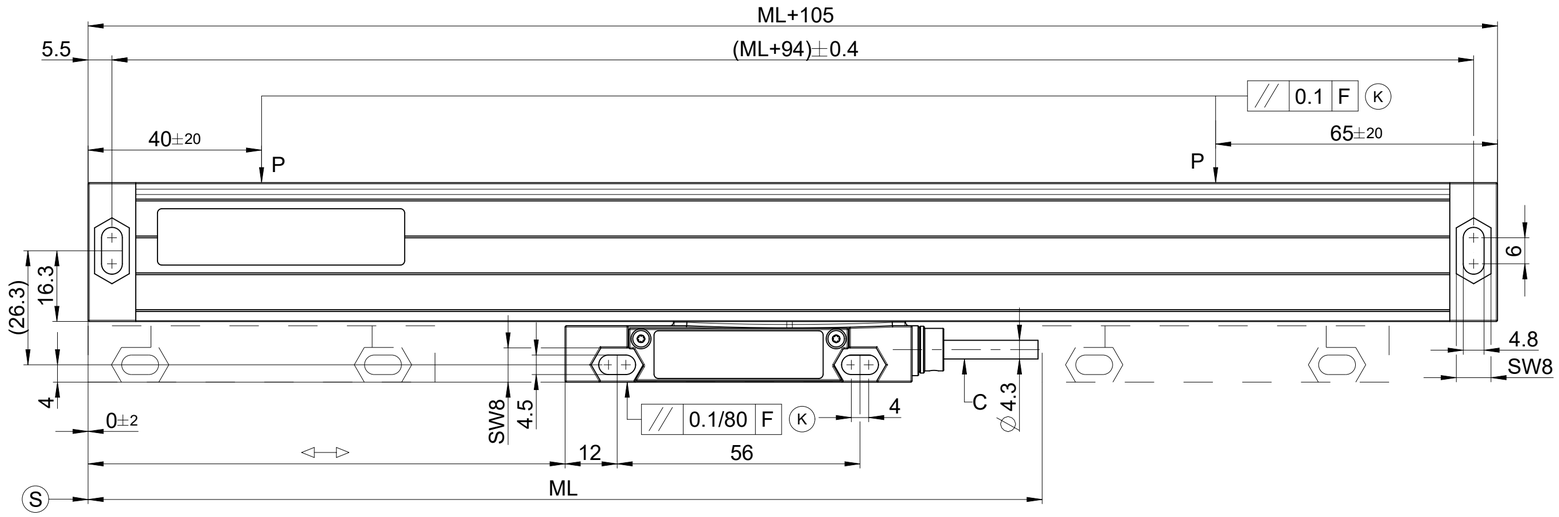

Kabel PUR im Schutzschlauch
PUR cable in protective sleeve

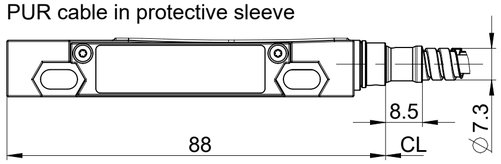

LS 477(C), LS 487(C)

Als Ersatzgerät kurzfristig verfügbar
Available as a replacement device on short notice

Abmessungen Abtasteinheit unterschiedlich
Dimensions of scanning unit are different

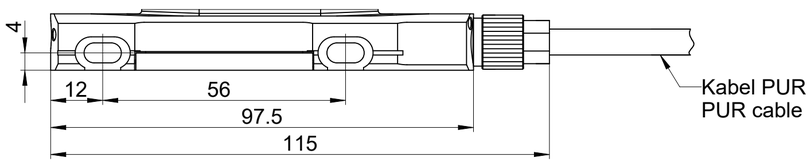

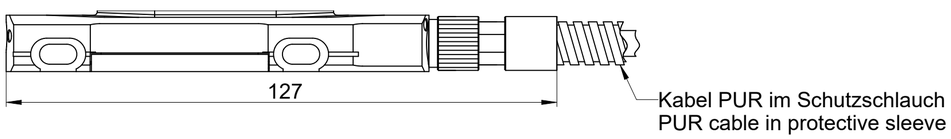

F = Maschinenführung / machine guideway
ML = Messlänge / measuring length
P = Messpunkte / gauging points
◁—▷ = 0 ... ML
C = Anschlusskabel PUR / PUR cable
CL = Kabellänge / cable length
(K) = kundenseitige Anbaumaße / required mating dimensions
(S) = Beginn der Messlänge ML / beginning of the measuring length ML

LS3x3(C)
Startwert bei Ausführung mit abstandscodierten Referenzmarken zwischen 0 und 3200
start value at version with distance-coded reference marks between 0 and 3200

				ID number: 1270358-01
				Change No. C113858-56 Phase: Nicht-Serie
	Original drawing Scale	Format	LS 373(C), LS 383(C) LS 373(C), LS 383(C) Anschlussmaße / Mating Dimensions	Tolerierung nach DIN ISO 8015 Tolerances as per DIN ISO 8015
Dimensions in mm	1:1	A2		Allgemeintol. ISO 2768-mH ≦6mm:±0,2 General tol. ISO 2768-mH ≦6mm:±0,2

The reproduction, distribution and utilization of this document as well as the communication of its contents to others without express authorization is prohibited. Offenders will be held liable for the payment of damages. All rights reserved in the event of the grant of a patent, utility model or design. (ISO 16016)

HEIDENHAIN
DR. JOHANNES HEIDENHAIN GmbH
83301 Traunreut, Germany

Version	Revision	Sheet	Page
D1328652-03-A-01			1 of 1

Document number

886 200 A2