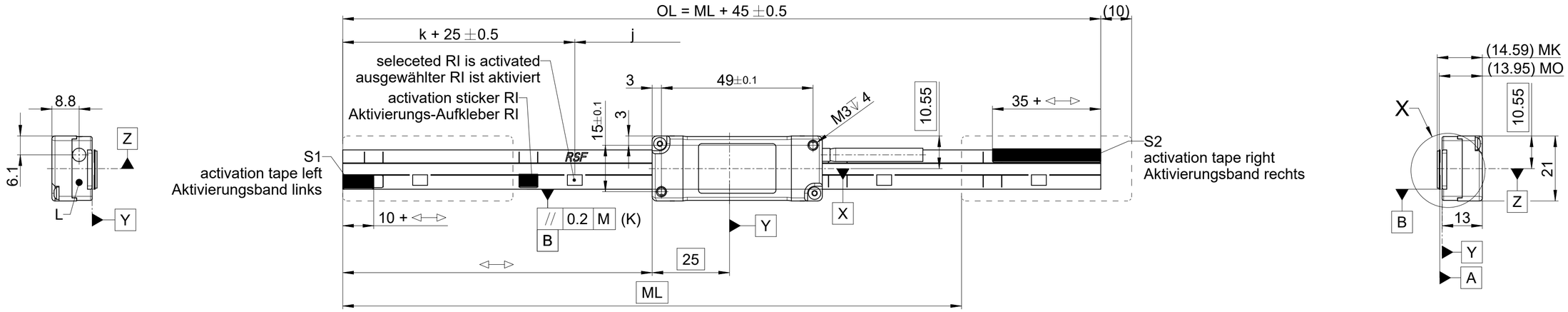

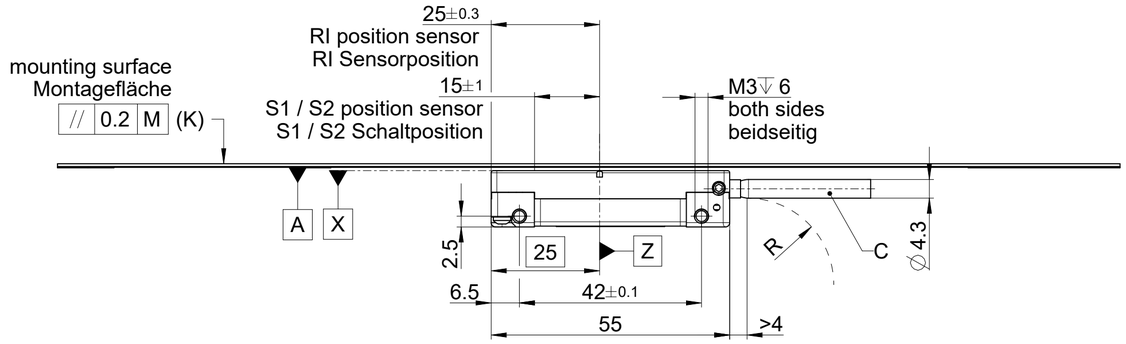

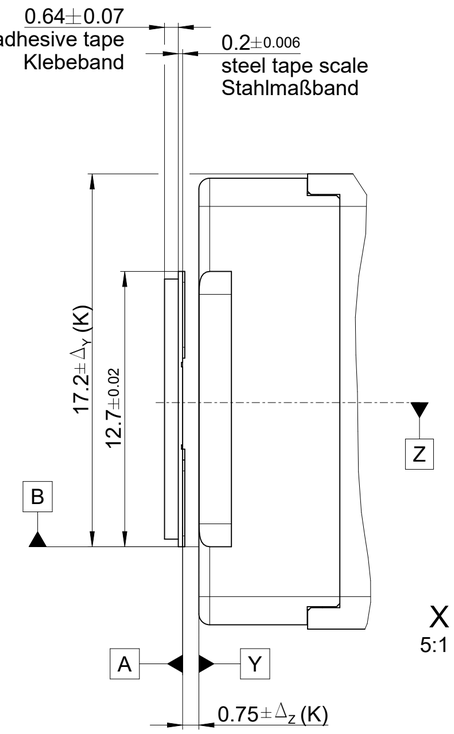

M = machine guideway / Maschinenführung
ML = measuring length / Messlänge
OL = overall length / Gesamtlänge
⟷ = 0 ... ML
RI = selectable reference mark / wählbare Referenzmarke
k = any position of selected reference mark starting from the beginning of the ML
beliebige Position der ausgewählten Referenzmarke vom Beginn der ML
j = additional reference marks spaced n x 50
zusätzliche Referenzmarken im Abstand von n x 50
C = cable / Anschlusskabel
K = required mating dimensions / kundenseitige Anschlussmaße
L = LED function control / LED Funktionskontrolle
R = bending radius / Biegeradius
stat. R ≥ 8mm, dyn. R ≥ 20mm
S1, S2 = switch signal / Schaltsignal
n = 1,2,3,...

MO = steel tape scale / Stahlmaßband
MK = steel tape scale with adhesive tape / Stahlmaßband mit Klebeband

Permissible position deviation scanning head - steel tape scale | A | B |
Zulässige Lageabweichung Abtastkopf - Maßband | A | B |
Δ_Z = ±0.2mm (gap / Abstand)
Δ_Y = ±0.5mm (lateral / Verschiebung)
φ_Z = ±1.0mrad or / oder ± 0.06° (yaw angle / Gierwinkel)
φ_Y = ±3.6mrad or / oder ± 0.20° (pitch angle / Nickwinkel)
φ_X = ±5.0mrad or / oder ±0.29° (roll angle / Rollwinkel)

				ID number:
				Change No. C157360-12
				Phase: Serie
Original drawing		MS25 MK/MO		Tolerances as per ISO 8015
Scale	Format	MS25 MK/MO		
Dimensions in mm	1:1	A2	Anschlussmaße / Mating Dimensions	General Tolerances ISO 2768:1989-mH ≤ 6:±0.2

The reproduction, distribution and utilization of this document as well as the communication of its contents to others without express authorization is prohibited. Offenders will be held liable for the payment of damages. All rights reserved in the event of the grant of a patent, utility model or design. (ISO 16016)

RSF Elektronik
www.rsf.at

Released	Version	Revision	Sheet	Page
22.02.2024	D1236056-02-A-01			1 of 1
	Document number			

1 213 928 A2