Darstellung ohne Limitblende und Fixpunkt

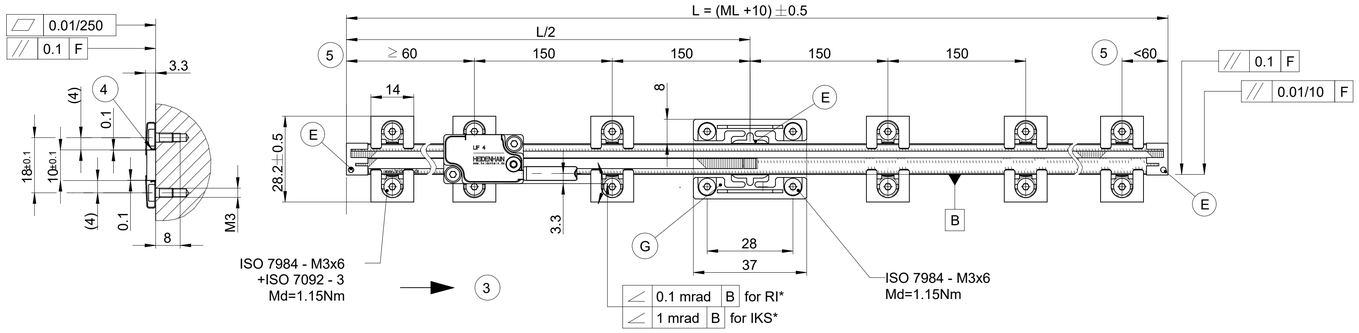

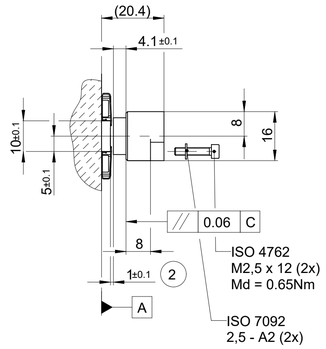

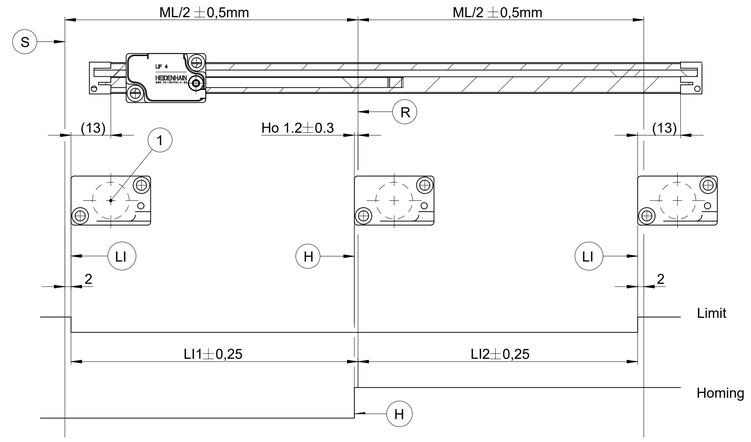

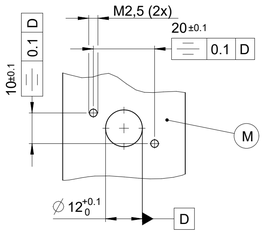

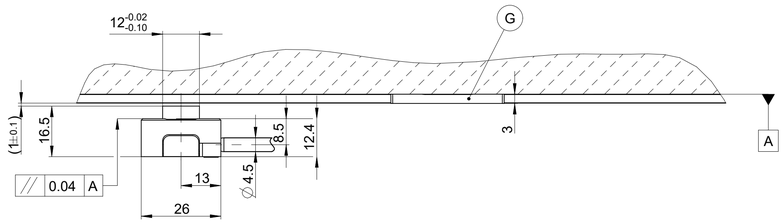

Bemaßung der Abdeckblende

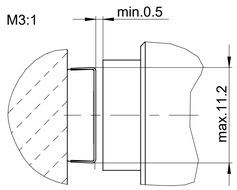

Position Anschlagstifte
Position stop pins

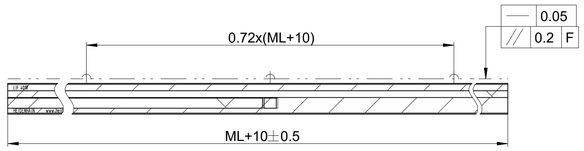

L = Maßstablänge	scale length
F = Maschinenführung	Machine guideway
* = max. Änderung bei Betrieb	Max. change during operation
ML = Messlänge	Measuring length
(E) = Vakuumkleber, Aushärtung bei Raumtemperatur in 24 h	Vacuum glue, curing at roomtemperatur in 24 h
(LI) = Limit, verstellbar	Limit-Label, adjustable
(H) = Schalter für Homingspur	Switch for homing track
Ho = Schaltpunkt Homing	Trigger point homing
(R) = Referenzmarken-Lage	Reference mark position
(S) = Beginn der Messlänge	Begin of measuring length
(M) = Montagefläche für AK	Mounting surface for AK
(G) = Fixpunktelement	Fixed-point
(H) = Homing Schaltflanken	Homing edge
(1) = optische Mitte	Optical center
(2) = Abstand Abtastkopf / Maßstab	Mounting gap
(3) = positive Messrichtung	positive direction
(4) = Abstand mit Folie einstellen	adjusted by means of a space shim
(5) = zusätzliches Spannpratzenpaar abhängig von ML	additional fixing clamp pair depending on ML

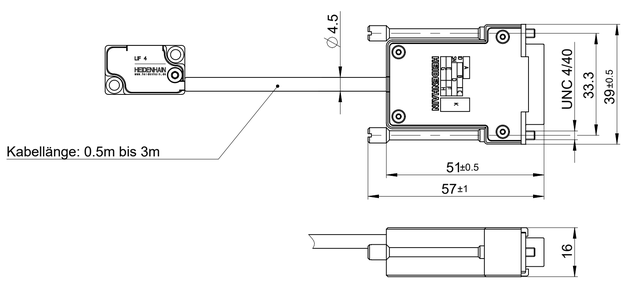

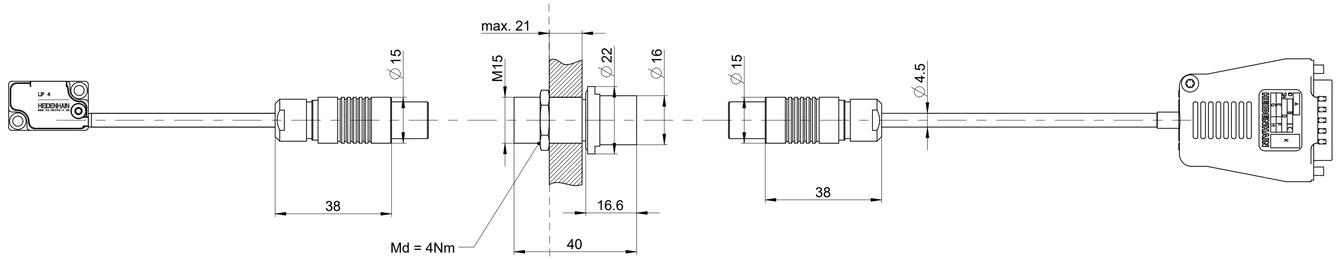

Montagebohrung
für Durchführung

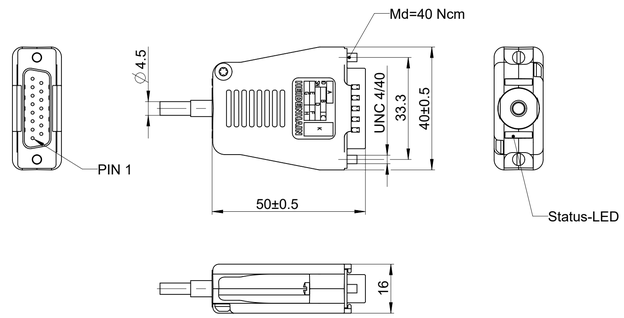

Vakuum

Luft / air-side

			ID number: 643555-01
			Change No. C064599-37
			Phase: Serie
Original drawing	Scale 1:1	Format A1	LIF 4x1V LIF 4x1V Anschlussmaße / Mating Dimensions
Dimensions in mm			Tolerierung nach DIN ISO 8015 Tolerances as per DIN ISO 8015 Allgemeintol. ISO 2768-mH ≤6mm:±0,2 General tol. ISO 2768-mH ≤6mm:±0,2

The reproduction, distribution and utilization of this document as well as the communication of its contents to others without express authorization is prohibited. Offenders will be held liable for the payment of damages. All rights reserved in the event of the grant of a patent, utility model or design. (ISO 16016)

HEIDENHAIN
DR. JOHANNES HEIDENHAIN GmbH
83301 Traunreut, Germany

Version	Revision	Sheet	Page
D1229169-01 - A-01			1 of 1

Document number

886 200 A1