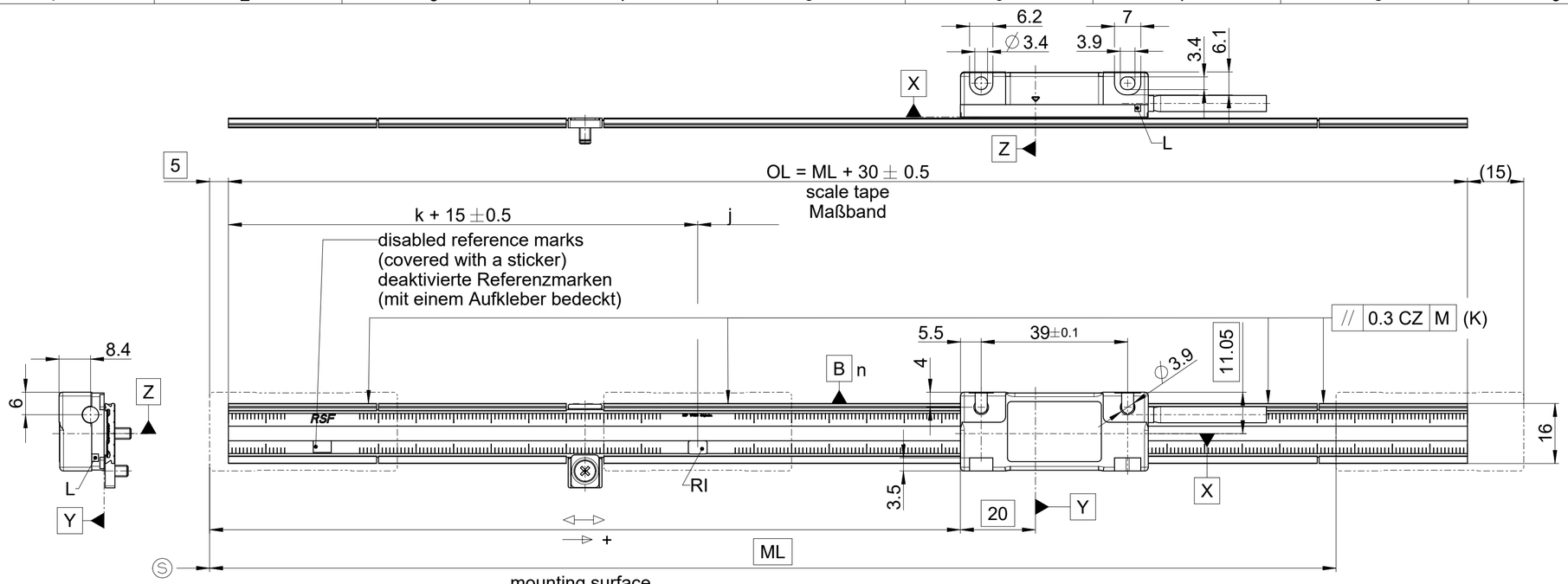

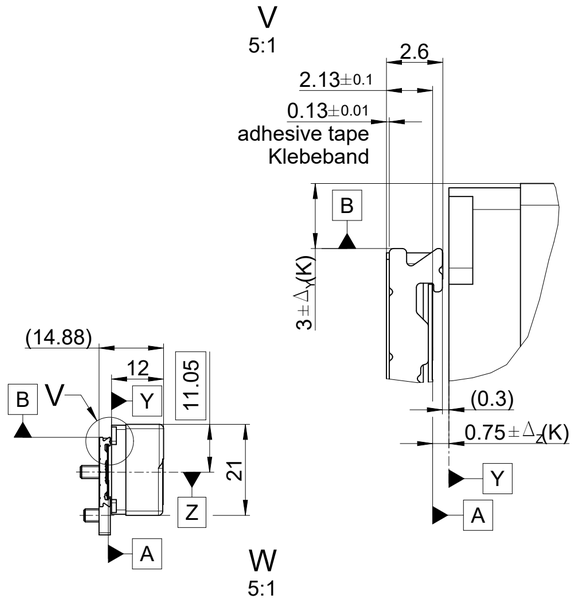

SL, SR = segment length / Segmentlänge
≥ 20 ... ≤ 1000 = 1x remnant / Reststück (≥ 20 ... ≤ 1000)
>1000 ... ≤ 1500 = 1x 499,5 + 1x remnant / Reststück (>500 ... ≤ 1000)
>1500 ... ≤ 2000 = 1x 999,5 + 1x remnant / Reststück (>500 ... ≤ 1000)
>2000 ... ≤ 2500 = 1x 499,5 + 1x 999,5 + 1x remnant / Reststück (>500 ... ≤ 1000)
>2500 ... ≤ 3000 = 2x 999,5 + 1x remnant / Reststück (>500 ... ≤ 1000)
>3000 ... ≤ 3500 = 1x 499,5 + 2x 999,5 + 1x remnant / Reststück (>500 ... ≤ 1000)
etc.
M = machine guideway / Maschinenführung
ML = measuring length / Messlänge
OL = overall length / Gesamtlänge
⟷ = 0...ML
→ + = direction of motion of the scanning unit for ascending position values
Bewegungsrichtung des Abtastkopfes für steigende Positionswerte
Ⓢ = beginning of the measuring length / Beginn der Messlänge
RI = reference mark(s) / Referenzmarke(n)
k = any position of selected reference mark starting from the beginning of the ML
beliebige Position der ausgewählten Referenzmarke vom Beginn der ML
j = additional reference marks selectable every 100mm
zusätzliche Referenzmarken alle 100mm auswählbar
f = OL/2 (Standard)
any position of the clamping element (optional)
beliebige Position des Klemmelements (optional)
C = cable / Anschlusskabel
(K) = required mating dimensions / kundenseitige Anschlussmaße
L = LED function control / LED Funktionskontrolle
R = bending radius / Biegeradius
stat. R ≥ 8mm, dyn. R ≥ 48mm
n = 1,2,3, ...(number of segments / Anzahl der Segmente)

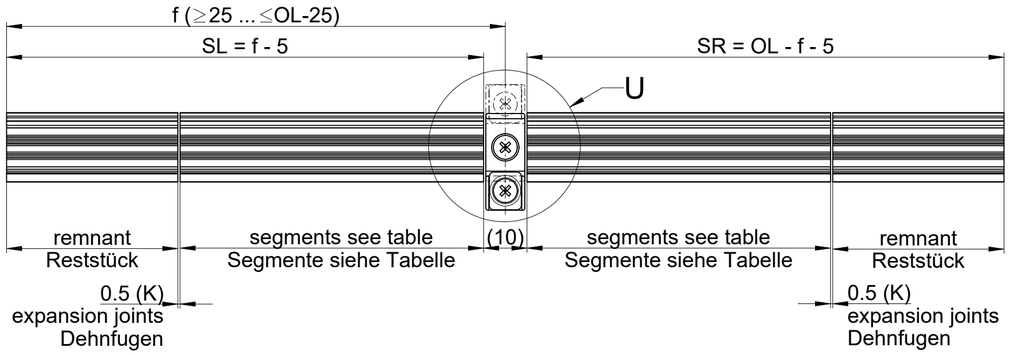

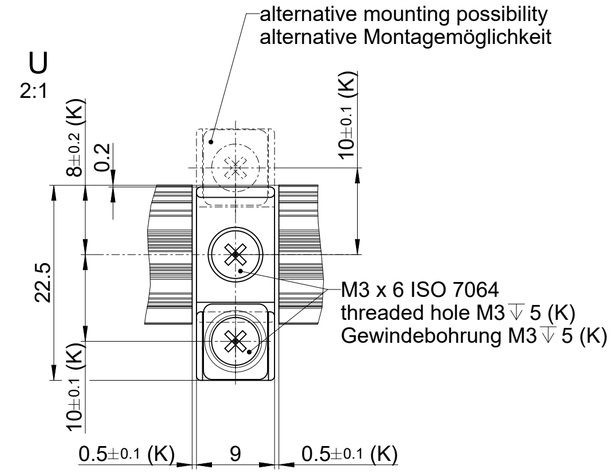

Permissible position deviation scanning head - scale tape | A | B |
Zulässige Lageabweichungen Abtastkopf - Maßband | A | B |
Δ_Z = +0.3 / -0.2 (gap / Abstand)
Δ_Y = ± 0.5 (lateral / Verschiebung)
φ_Z = ± 8 mrad or / oder ± 0.46° (yaw angle / Gierwinkel)
φ_Y = ± 8 mrad or / oder ± 0.46° (pitch angle / Nickwinkel)
φ_X = ± 12 mrad or / oder ± 0.69° (roll angle / Rollwinkel)

				ID number:
				Change No. C157360-30
				Phase: Serie
Original drawing		MS45 MP		Tolerances as per ISO 8015
Scale	Format	MS45 MP		
Dimensions in mm	1:1	A2	Anschlussmaße / Mating Dimensions	General Tolerances ISO 2768:1989-mH ≤ 6:±0.2

The reproduction, distribution and utilization of this document as well as the communication of its contents to others without express authorization is prohibited. Offenders will be held liable for the payment of damages. All rights reserved in the event of the grant of a patent, utility model or design. (ISO 16016)

RSF Elektronik
www.rsf.at

Released	Version	Revision	Sheet	Page
21.06.2024	D1228451-03-B-01			1 of 1
	Document number			

1 213 928 A2