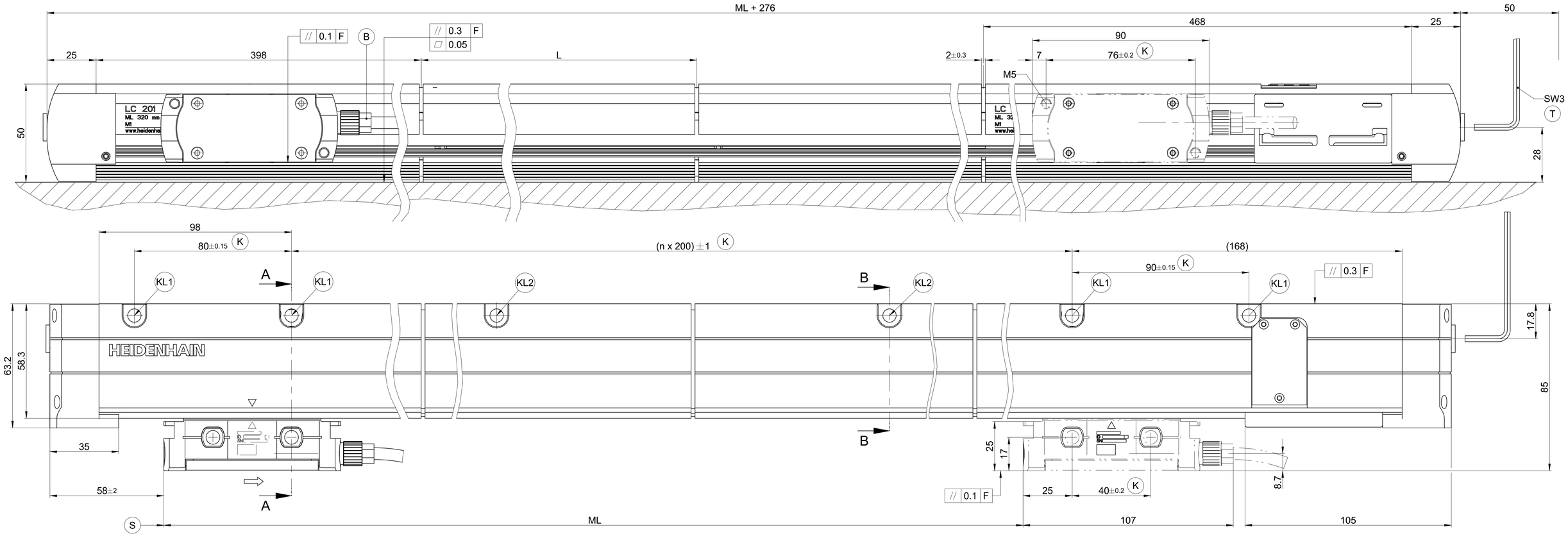

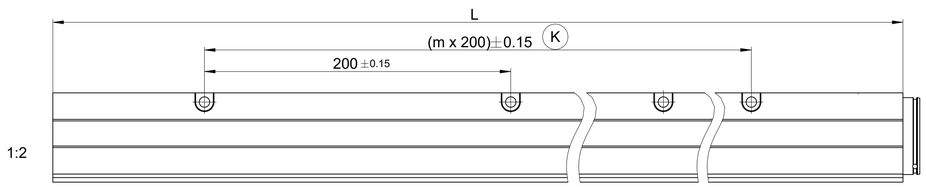

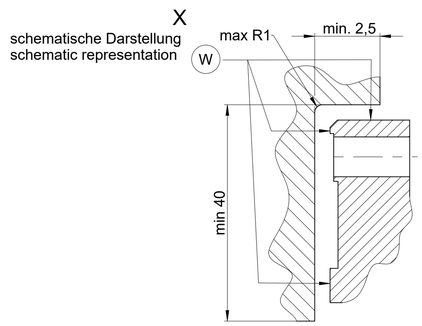

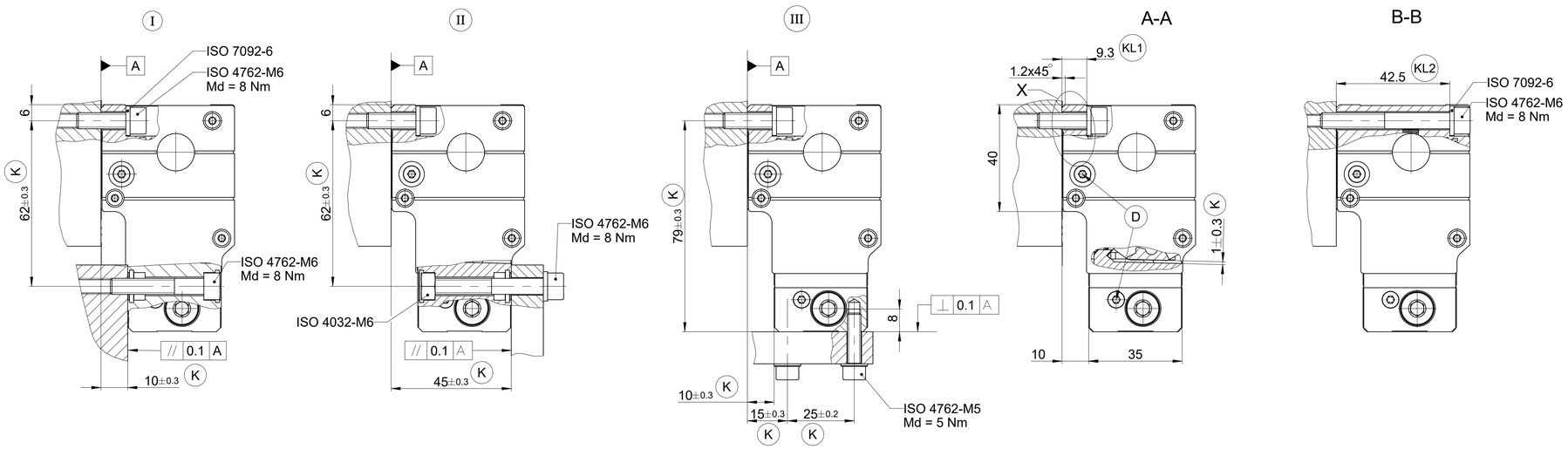

(I) (II) (III)	= Montagemöglichkeiten	Mounting options
F	= Maschinenführung	Machine guideway
(K)	= Kundenseitige Anschlussmaße	Required mating dimensions
(T)	= Spannschraube Maßband	Tensioning screw measuring tape
(B)	= Kabelanschluss beidseitig verwendbar	Cable connection usable at eighter end
(D)	= Druckluftanschluss	Compressed air inlet usable at eighter end
(S)	= Beginn der Messlänge ML	Beginning of measuring length ML
	(=100mm absolut)	(=100mm absolute)
(W)	= Anlageflächen	Mating surfaces
(KL1) (KL2)	= Klemmlänge	Clamping length
⇨	= Bewegungsrichtung der	Direction of scanning unit motion for
	Abtasteinheit für Ausgangssignal	output signals in accordance with interface
	gemäß Schnittstellen-Beschreibung	discription
L	= Gehäuseteilstück-Längen	Housing section lengths
ML	= Messlänge	Measuring length

ID number:
Change No. C163726-20
Phase: Serie

Original drawing — Scale 1:1 — Format A1 — Dimensions in mm

LC 2x1 N mehrteilig
LC 2x1 N multi-part
Anschlussmaße / Mating Dimensions

Tolerances as per ISO 8015
General Tolerances ISO 2768:1989-mH ≥6mm:±0,2

The reproduction, distribution and utilization of this document as well as the communication of its contents to others without express authorization is prohibited. Offenders will be held liable for the payment of damages. All rights reserved in the event of the grant of a patent, utility model or design. (ISO 16016)

HEIDENHAIN
DR. JOHANNES HEIDENHAIN GmbH
83301 Traunreut, Germany

Released: 29.04.2026
Version | Revision | Sheet | Page
Document number: D1219331-03-A-01
1 of 1

886 200 A1