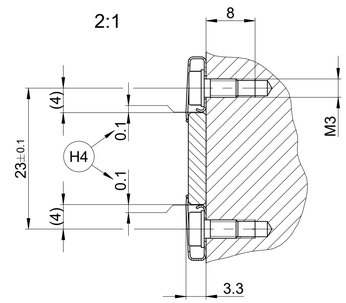

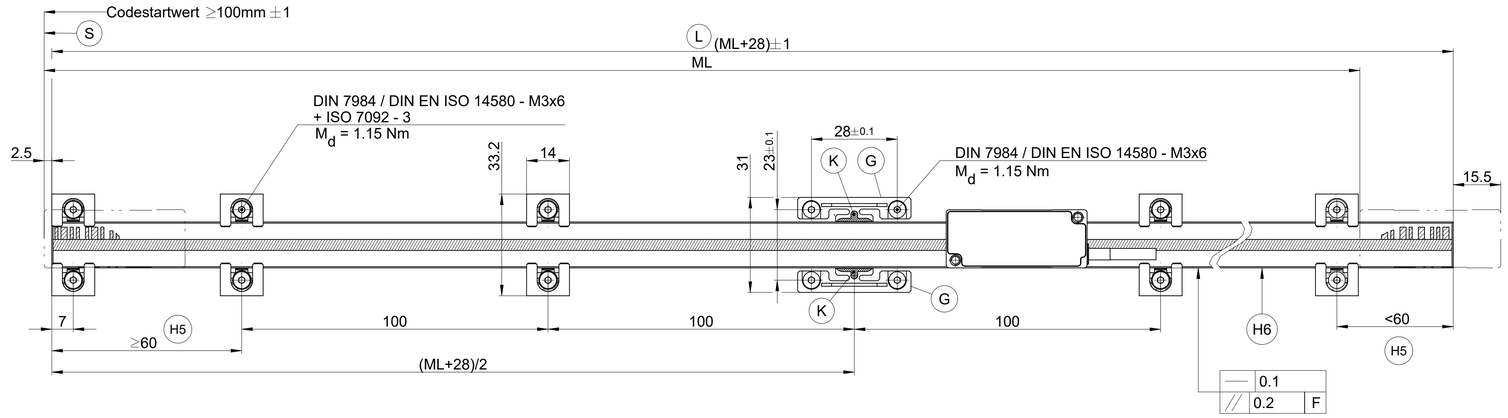

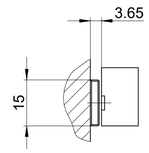

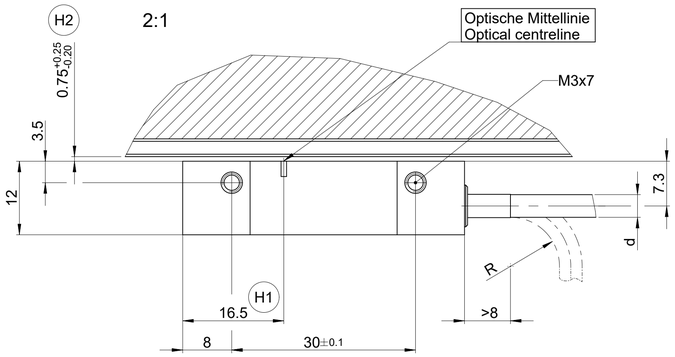

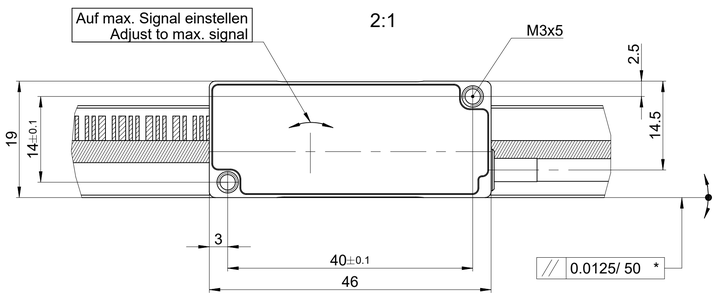

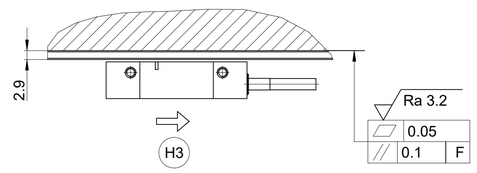

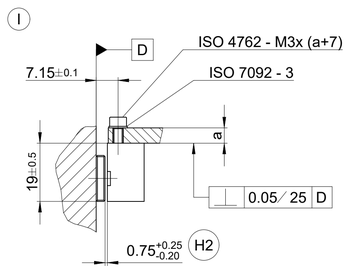

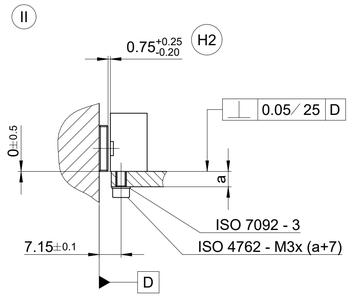

Position Anschlagstifte
Position stop pins

ML ≤ 2040

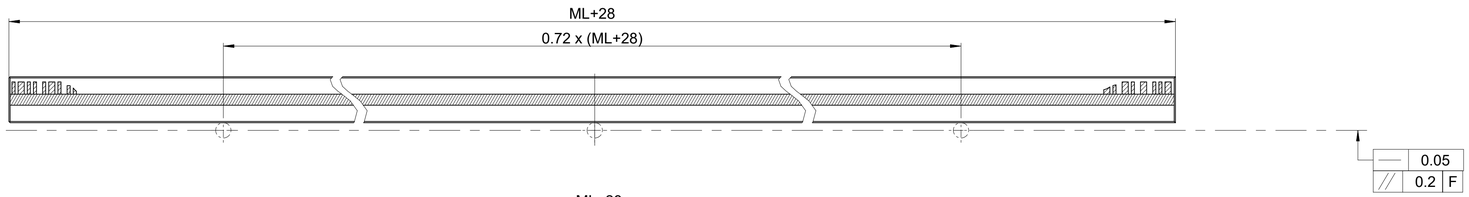

ML > 2040

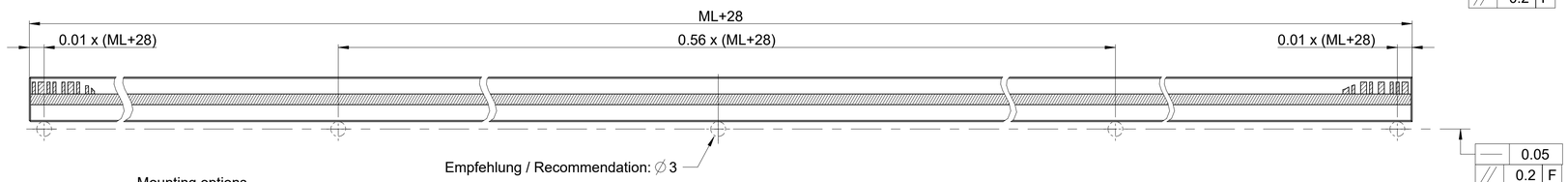

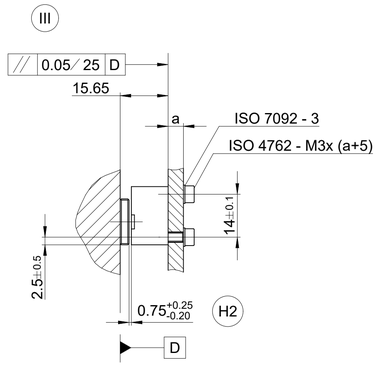

(I) (II) (III) = Montagemöglichkeiten	Mounting options
F = Maschinenführung	Machine guideway
* = Anbaufehler plus dyn. Führungsfehler	Mounting failure plus dyn. failures of guideway
(L) = Maßstablänge	Scale length
(S) = Beginn der Messlänge ML	Beginning of measuring length ML
(H1) = Optische Mittellinie	Optical centreline
(H2) = Montageabstand Abtastkopf zu Maßstab	Mounting gap
(H3) = Bewegungsrichtung der Abtasteinheit für Ausgangssignale gemäß Schnittstellenbeschreibung	Direction of scanning unit motion for output signals in accordance with interface description
(H4) = Abstand wird bei Montage mit Abstandsfolie eingestellt	Distance is adjusted with spacer foil while mounting process
(H5) = abhängig von Messlänge ML zusätzliches Spannpratzenpaar	depending on measuring length ML additional pair of fixing clamps
(H6) = Anschlagfläche Maßstab	Stop surface scale
(K) = Klebstoff	Adhesive
(G) = Fixpunktelement zur Definition des thermischen Fixpunktes	Fixed-point element in order to define the thermal fixed point

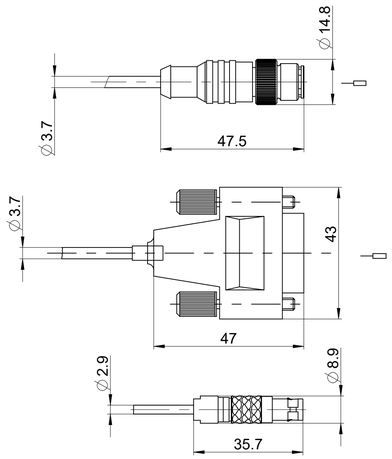

	d	R	R
		Feste Verlegung Rigid configuration	Wechselbiegung Frequent flexing
PUR	D 3.7 mm	> 8 mm	>= 40 mm
PUR	D 2.9 mm	> 6 mm	>= 30 mm

ID number: 1200643-01
Change No. C160627-05
Phase: Serie

Original drawing
Scale 1:1 | Format A1
Dimensions in mm

LIC 41x3
LIC 41x3
Anschlussmaße / Mating Dimensions

Tolerances as per ISO 8015
General Tolerances ISO 2768:1989-mH ≤6mm:±0,2

The reproduction, distribution and utilization of this document as well as the communication of its contents to others without express authorization is prohibited. Offenders will be held liable for the payment of damages. All rights reserved in the event of the grant of a patent, utility model or design. (ISO 16016)

HEIDENHAIN
DR. JOHANNES HEIDENHAIN GmbH
83301 Traunreut, Germany

Released 15.12.2023
Version | Revision | Sheet | Page
D1200643-06-A-01
Document number
1 of 1

886 200 A1