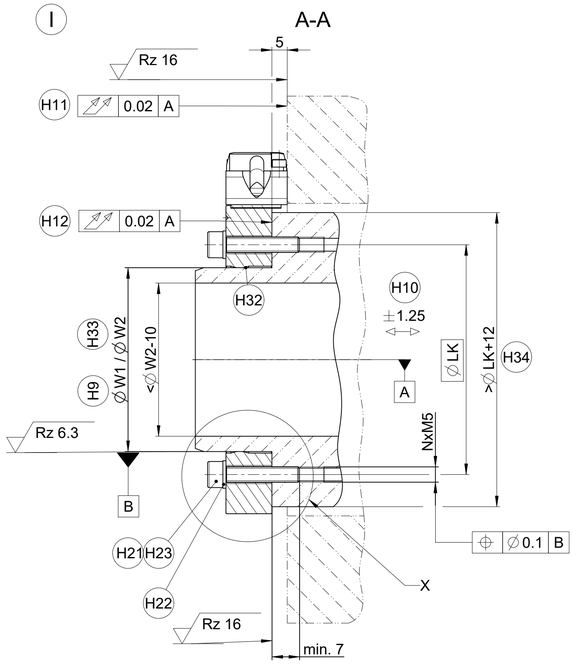

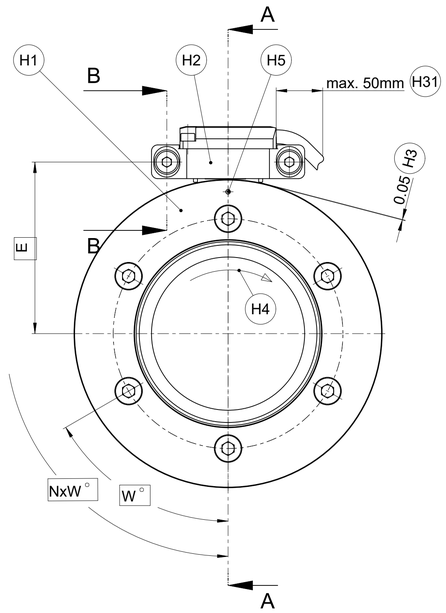

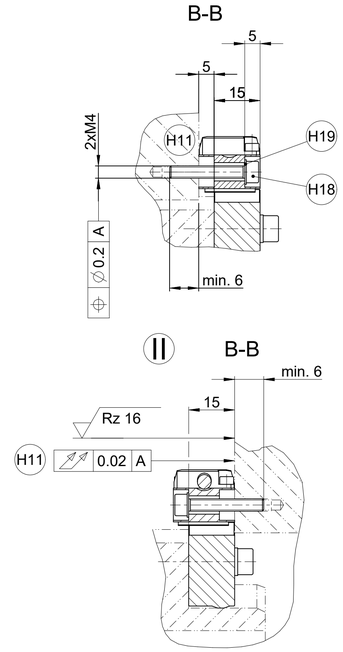

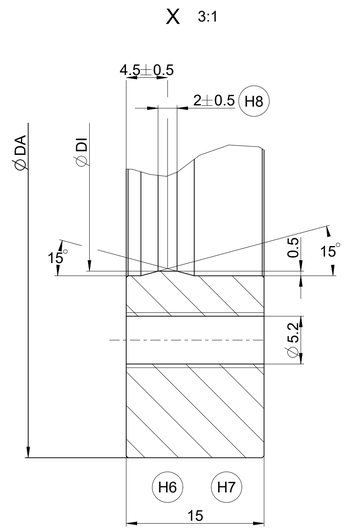

2:1 FODEA1=15 / RIANA1 = 6 H13 H16 H17

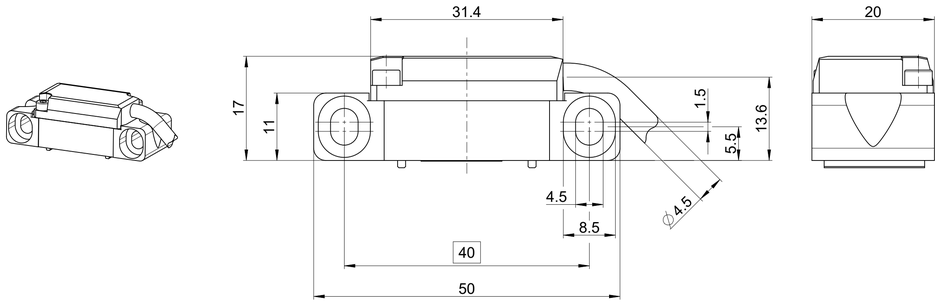

2:1 FODEA1=15 / RIANA1 = 7 H13 H16 H17

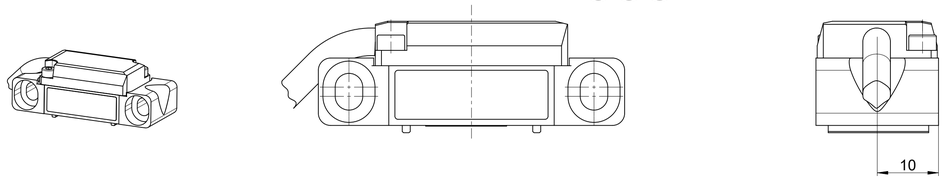

2:1 FODEA1=16 / RIANA1 = 3 H13 H16 H17

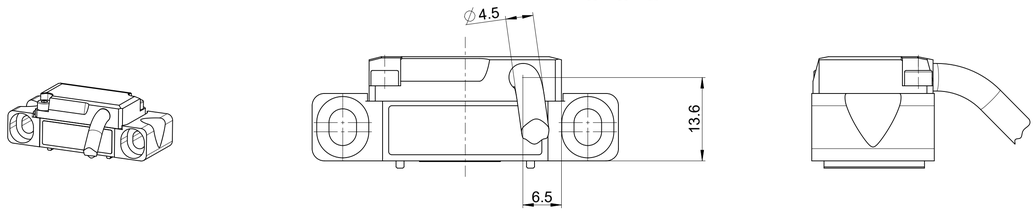

2:1 FODEA1=17 / RIANA1 = 6 H14 H16 H17

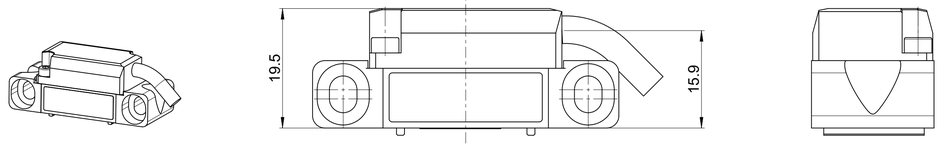

A	Bearing for customer shaft	A	Lagerung Kundenwelle
H1	Scale drum	H1	Teilungstrommel
H2	Scanning head	H2	Abtastkopf
H3	Mounting clearance 0.05 adjusted with spacer foil	H3	Montageabstand 0,05 mit Folie eingestellt
H4	Positive direction of rotation	H4	Positive Drehrichtung
H5	Reference mark position	H5	Referenzmarkenlage
H6	Main track	H6	Hauptspur
H7	Reference mark track	H7	Referenzspur
H8	Centering collar	H8	Zentrierbund
H9	Shaft fit without Mechanical Fault Exclusion; When this fit is used, the screws are to be secured against unintended loosening	H9	Wellentoleranz ohne mechanischem Fehlerausschluss; Bei Verwendung dieser Wellenpassung sind die Schrauben H21 gegen unbeabsichtigtes Lösen zu sichern
H10	Maximum allowable movement of the customer shaft wrt. track scanning	H10	Axialtoleranz Kundenwelle
H11	Mounting surface scanning head	H11	Montagefläche Abtastkopf
H12	Mounting surface scale drum	H12	Montagefläche Teilungstrommel
H13	Scanning head AK ERM 2220/2280/2283	H13	Abtastkopf AK ERM 2220/2280/2283
H14	Scanning head AK ERM 2210/2290M/2213/2293M	H14	Abtastkopf AK ERM 2210/2290M/2213/2293M
H16	RIANA1=3 cable outlet axial RIANA1=6 cable outlet tangential (right) RIANA1=7 cable outlet tangential (left)	H16	RIANA1=3 Kabelausgang axial RIANA1=6 Kabelausgang tangential (rechts) RIANA1=7 Kabelausgang tangential (links)
H17	FODEA1=15 Low cover, tangential cable outlet FODEA1=16 Low cover, axial cable outlet	H17	FODEA1=15 Deckel niedrig, Kabelausgang tangential FODEA1=16 Deckel niedrig, Kabelausgang axial
H18	Cylinder head screw ISO 4762 - M4 - 8.8, Tightening torque 2.0±0.1 Nm, friction coeffizient class B according to VDI 2230, tighten screws alternatingly and gradually	H18	Zylinderschraube ISO 4762 - M4 - 8.8, Anziehdrehmoment 2,0±0.1 Nm, Reibungszahlklasse B nach VDI 2230, abwechselnd schrittweise festschrauben
H19	Washer ISO 7092 - 4 - 200 HV	H19	Scheibe ISO 7092 - 4 - 200 HV
H21	Cylinder head screw ISO 4762 - M5 - 8.8, Tightening torque 5.05±0.25 Nm, friction coeffizient class B according to VDI 2230, mounting temperature 15 °C to 35 °C; after thermal joining, the scale drum must have cooled down to the permissible mounting temperature before fastening the screws	H21	Zylinderschraube ISO 4762 - M5 - 8.8, Anziehdrehmoment 5,05±0,25 Nm, Reibungszahlklasse B nach VDI 2230, Montagetemperatur 15 °C bis 35 °C; nach dem thermischen Fügen muss die Teilungstrommel vor der Schraubenmontage auf die zulässige Montagetemperatur abgekühlt sein
H22	Washer ISO 7092 - 5 - 200 HV	H22	Scheibe ISO 7092 - 5 - 200 HV
H23	Use all intended screws	H23	Alle vorgesehenen Schrauben verwenden
H24	Fatique strength (10^7load changes) as per FKM-Guideline under consideration of H9,H20,H21,H22,H23	H24	Dauerfestigkeit (10^7Lastwechsel) nach FKM-Richtlinie bei Beachtung von H9,H20,H21,H22,H23
H31	Cable support	H31	Kabelabstützung
H32	Shaft fit; ensure full-surface contact	H32	Wellenpassung ganzflächige Kontaktfläche beachten
H33	Shaft tolerance with Mechanical Fault Exclusion	H33	Wellentoleranz mit mechanischem Fehlerausschluß
H34	Exception: For Drum type A59 =ØLK+10 applies	H34	Ausnahme: Für Trommelform A59 gilt =ØLK+10

A61	113,16	80 +0,022/+0,014	80 +0,010/+0,002	80 0/-0,008	62,3	6x60° /M6	95	1800	14500
A59	75,44	55 +0,015/+0,007	55 +0,010/+0,002	55 0/-0,008	43,4	6x60° /M6	65	1200	18000
A56	64,37	40 +0,010/+0,003	40 +0,009/+0,002	40 0/-0,007	37,9	6x60° /M6	50	1024	22000
A55	221,29	180 +0,055/+0,043	180 +0,015/+0,003	180 0/-0,012	116,4	6x60° /M6	190	3520	5500
A54	213,24	160 +0,049/+0,037	160 +0,015/+0,003	160 0/-0,012	112,3	6x60° /M6	175	3392	7000
A53	452,64	380 +0,119/+0,101	380 +0,022/+0,004	380 0/-0,018	232,0	12x30° /M6	395	7200	3000
A52	326,90	260 +0,082/+0,066	260 +0,020/+0,004	260 0/-0,016	169,2	6x60° /M6	275	5200	4500
A48	257,50	160 +0,049/+0,037	160 +0,015/+0,003	160 0/-0,012	134,5	6x60° /M6	170	4096	5000
A36	176,03	140 +0,044/+0,032	140 +0,015/+0,003	140 0/-0,012	93,7	6x60° /M6	155	2800	8500
A34	257,50	160 +0,049/+0,037	160 +0,015/+0,003	160 0/-0,012	134,5	6x60° /M6	175	4096	6000
A32	257,50	130 +0,041/+0,029	130 +0,015/+0,003	130 0/-0,012	134,5	6x60° /M6	145	4096	6500
A29	150,88	70 +0,019/+0,011	70 +0,010/+0,002	70 0/-0,008	81,2	6x60° /M6	85	2400	11000
A28	257,50	200 +0,063/+0,049	200 +0,018/+0,004	200 0/-0,014	134,5	6x60° /M6	215	4096	6000
A26	90,53	55 +0,015/+0,007	55 +0,010/+0,002	55 0/-0,008	51,0	6x60° /M6	70	1440	18500
A23	257,50	120 +0,036/+0,026	120 +0,013/+0,003	120 0/-0,010	134,5	6x60° /M6	135	4096	6500
A21	128,75	70 +0,019/+0,011	70 +0,010/+0,002	70 0/-0,008	70,1	6x60° /M6	95	2048	14000
A20	150,88	95 +0,029/+0,019	95 +0,013/+0,003	95 0/-0,010	81,2	6x60° /M6	110	2400	11000
A19	257,50	140 +0,044/+0,032	140 +0,015/+0,003	140 0/-0,012	134,5	6x60° /M6	155	4096	6500
A18	150,88	110 +0,033/+0,023	110 +0,013/+0,003	110 0/-0,010	81,2	6x60° /M6	125	2400	10500
A17	326,90	295 +0,093/+0,077	295 +0,020/+0,004	295 0/-0,016	169,2	6x60° /M6	310	5200	4500
A16	128,75	90 +0,027/+0,017	90 +0,013/+0,003	90 0/-0,010	70,1	6x60° /M6	105	2048	12500
A15	128,75	65 +0,018/+0,010	65 +0,010/+0,002	65 0/-0,008	70,1	6x60° /M6	80	2048	13000
A14	128,75	95 +0,029/+0,019	95 +0,013/+0,003	95 0/-0,010	70,1	6x60° /M6	110	2048	12500
A12	176,03	130 +0,041/+0,029	130 +0,015/+0,003	130 0/-0,012	93,7	6x60° /M6	145	2800	9000
A11	128,75	60 +0,016/+0,008	60 +0,010/+0,002	60 0/-0,008	70,1	6x60° /M6	75	2048	13000
A08	257,50	220 +0,069/+0,055	220 +0,018/+0,004	220 0/-0,014	134,5	6x60° /M6	235	4096	6000
A07	150,88	105 +0,031/+0,021	105 +0,013/+0,003	105 0/-0,010	81,2	6x60° /M6	120	2400	10500
A06	150,88	80 +0,022/+0,014	80 +0,010/+0,002	80 0/-0,008	81,2	6x60° /M6	95	2400	11000
A05	113,16	70 +0,019/+0,011	70 +0,010/+0,002	70 0/-0,008	62,3	6x60° /M6	85	1800	14500
A04	257,50	180 +0,055/+0,043	180 +0,015/+0,003	180 0/-0,012	134,5	6x60° /M6	195	4096	6000
A03	150,88	120 +0,036/+0,026	120 +0,013/+0,003	120 0/-0,010	81,2	6x60° /M6	135	2400	10500
A02	128,75	80 +0,022/+0,014	80 +0,010/+0,002	80 0/-0,008	70,1	6x60° /M6	95	2048	13000
A01	75,44	40 +0,010/+0,003	40 +0,009/+0,002	40 0/-0,007	43,4	6x60° /M6	50	1200	19000
Trommelform Drum type	∅DA DIA DA	∅W2 DIA W2 (H33)	∅W1 DIA W1 (H9)	∅DI DIA DI	E	NxW° /G	∅LK	Signalperioden Signal periods	Drehzahl min^{-1} Shaftspeed rpm (H24)

Für Mechanischen Fehlerausschluss obligatorisch For Mechanical Fault Exclusion is obligatory		
	Kundenwelle (Trommelanbindung) customer shaft	Kundenstator (Abtastkopfanbindung) mating stator
Werkstoff material	Stahl steel	Stahl, Gusseisen steel, cast iron
Zugfestigkeit R_m Tensile strength R_m	≧ 600 N/mm²	≧ 250 N/mm²
Scherfestigkeit τ_B Shearing strength τ_B	≧ 390 N/mm²	≧ 290 N/mm²
Elastizitätsmodul E Young's modulus E	200000 ... 215000 N/mm²	110000 ... 215000 N/mm²
Wärmeausdehnungskoeffizient α_T coefficient of thermal expansion α_T	10 ... 13 $\times 10^{-6}$ 1/K	10 ... 13 $\times 10^{-6}$ 1/K

			ID number:
			Change No. C166199-30 Phase: Serie
Original drawing Scale 1:1 Format A1	ERM 22x0/22x3 Axx mFA ERM 22x0/22x3 Axx MFE Anschlussmaße / Mating Dimensions		Tolerances as per ISO 8015
Dimensions in mm			General Tolerances ISO 2768:1989-mH ≦6mm:±0,2

The reproduction, distribution and utilization of this document as well as the communication of its contents to others without express authorization is prohibited. Offenders will be held liable for the payment of damages. All rights reserved in the event of the grant of a patent, utility model or design. (ISO 16016)

HEIDENHAIN
DR. JOHANNES HEIDENHAIN GmbH
83301 Traunreut, Germany

Released	Version	Revision	Sheet	Page
22.04.2024	D1144020-08-B-01			1 of 1

Document number

886 200 A1