dargestellt / displayed: POSITIP 8016 ACTIVE
POSITIP 8016 ohne / without X104, X105, X106
Netzteil mit / power supply with max. 38 W

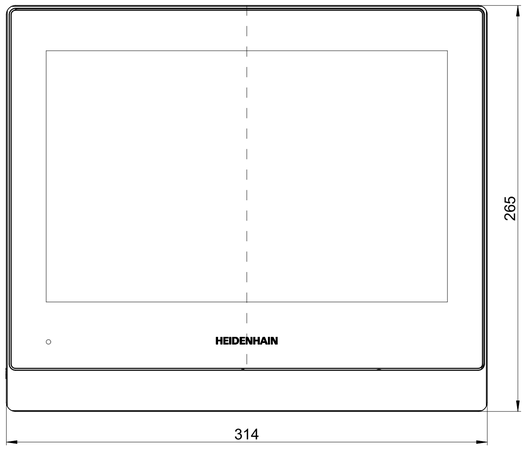

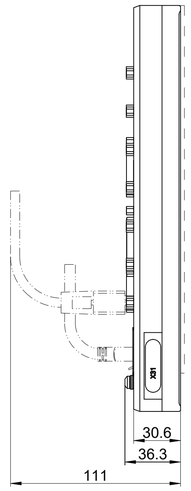

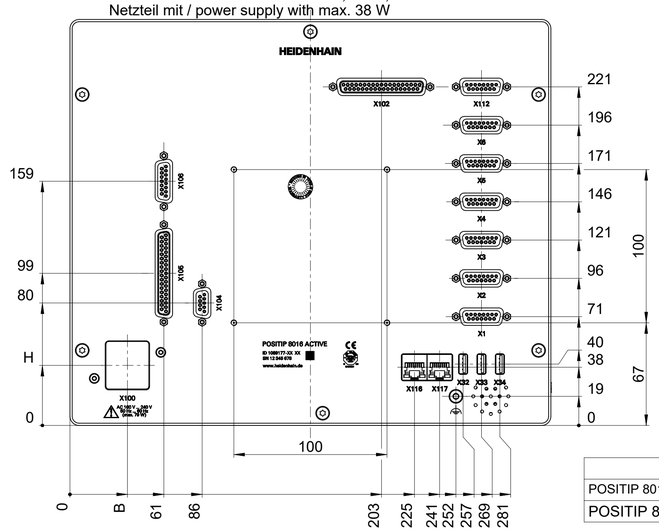

	B	H
POSITIP 8016 ACTIVE	37.5	39
POSITIP 8016	39.5	28

Zubehör / Accessories
1:5

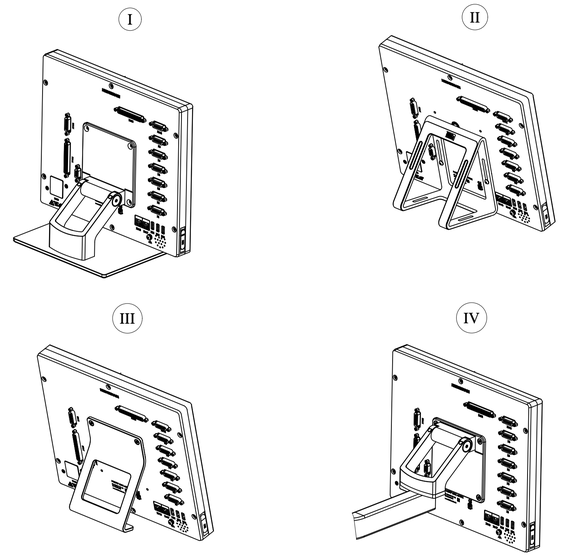

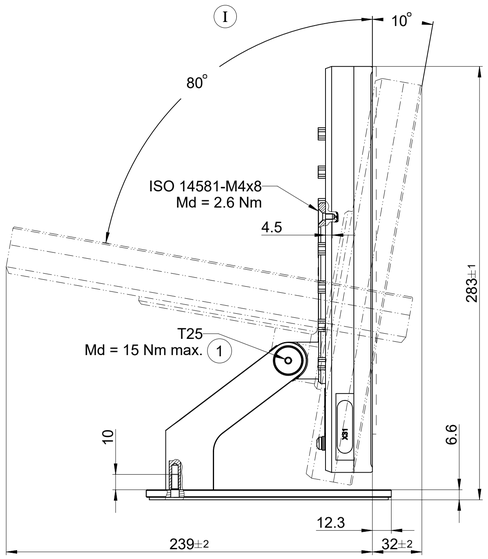

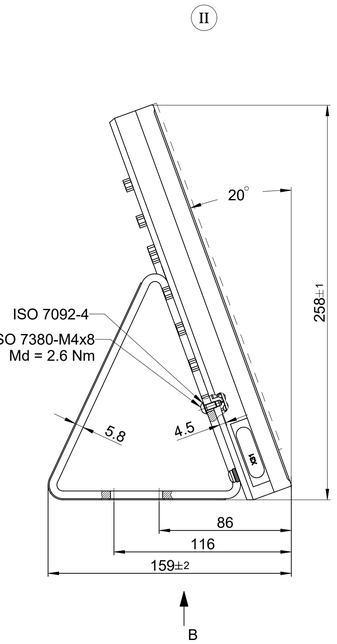

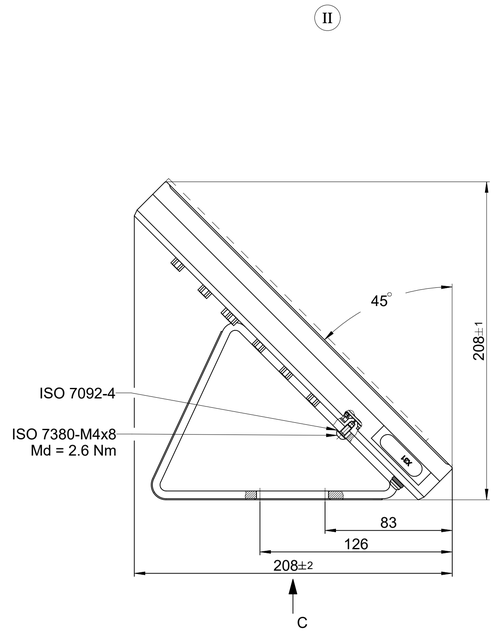

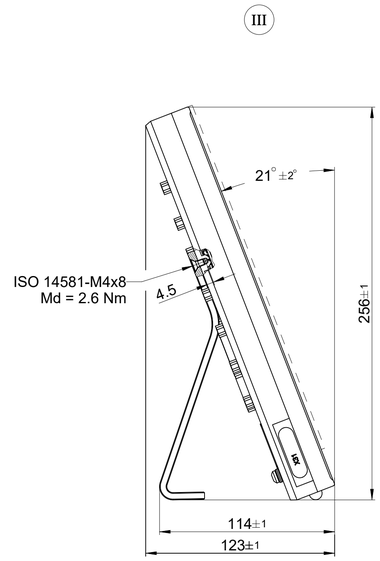

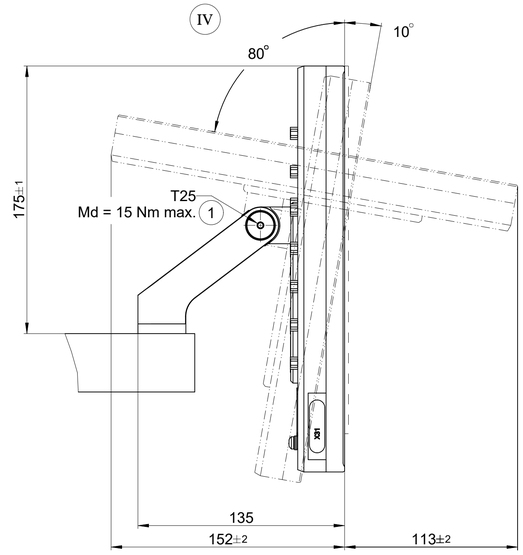

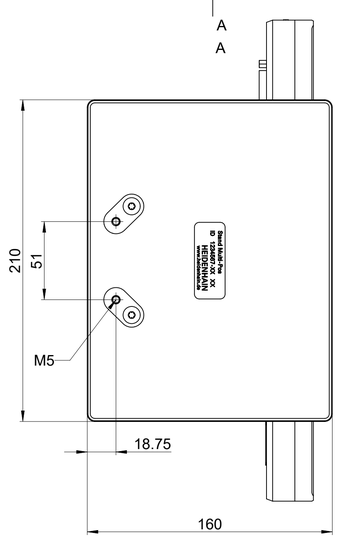

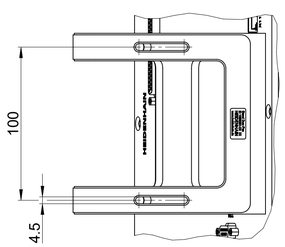

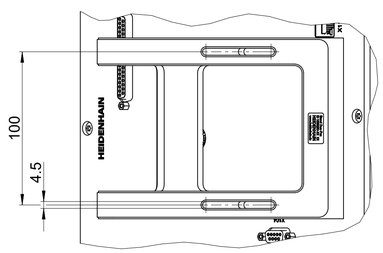

(I) = Standfuß Multi-Pos — Stand Multi-Pos
ID 1089230-03 — ID 1089230-03

(II) = Standfuß Duo-Pos — Stand Duo-Pos
ID 1089230-02 — ID 1089230-02

(III) = Standfuß Single-Pos — Stand Single-Pos
ID 1089230-01 — ID 1089230-01

(IV) = Halter Multi-Pos — Holder Multi-Pos
ID 1089230-04 — ID 1089230-04

(1) = Empfohlenes Anzugsdrehmoment: — Recommended tightening torque:
Md = 5.2 Nm — Md = 5.2 Nm

			ID number:	
			Change No.	C002171-5
			Phase:	Serie
Original drawing		POSITIP 8016 ACTIVE / POSITIP 8016	Tolerances as per ISO 8015	
Scale	Format	POSITIP 8016 ACTIVE / POSITIP 8016 / M		
Dimensions in mm	1:2	A1	Anschlussmaße / Mating Dimensions	General Tolerances ISO 2768:1989-mH ±6mm:±0,2

The reproduction, distribution and utilization of this document as well as the communication of its contents to others without express authorization is prohibited. Offenders will be held liable for the payment of damages. All rights reserved in the event of the grant of a patent, utility model or design. (ISO 16016)

HEIDENHAIN
DR. JOHANNES HEIDENHAIN GmbH
83301 Traunreut, Germany

Released	Version	Revision	Sheet	Page
09.11.2018	D1106175-00-D-01			1 of 1
	Document number			

886 200 A1